生产设备
Production Equipment

本公司技术含量、装配水平、规模总量、竞争实力始终在同行保持良好优势。公司始终坚持以科技为先导，不断完善内部管理，先后投入巨资改造设备，引进技术，形成CAD开发设计、铸造、精加工、质量检测等全过程生产控制体系。

The company's technical content, assembly level, total scale, competitive strength has always maintained a good advantage in the peer. The company always insists on taking science and technology as the guide, constantly improves internal management, successively invests a lot of money to transform equipment, introduces technology, and forms the whole process production control system of CAD development and design, casting, finishing, quality inspection, etc.

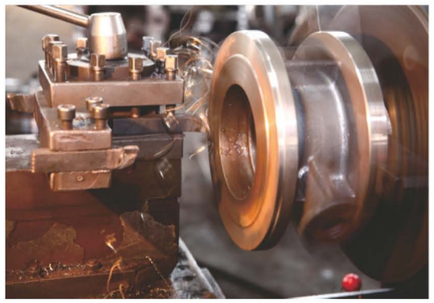

Excellent equipment creates
Excellent product quality...

高尖端的加工设备
造就优良的产品品质.....

目录
CONTENTS

蝶阀型号编制说明 Model Order Instruction

Ds 3 6 3 H -16 C

- C — 7.阀体材料代号Body material code
- -16 — 6.蝶阀公称压力Nominal pressure of butterfly valve
- H — 5.密封面材料代号Sealing surface material code
- 3 — 4.蝶阀结构型式Butterfly valve structure type
- 6 — 3.蝶阀连接方式Butterfly valve connection type
- 3 — 2.蝶阀驱动方式Butterfly valve operator type
- Ds — 1.蝶阀流向截断方式Butterfly valve flow truncation method

1.蝶阀流向截断方式Butterfly Valve Flow Truncation Method

Ds	D
可任意流向截断介质的蝶阀(双向压) Butterfly valve with any flow direction to cut off themedium(Bi-directional pressure)	只能单一流向截断介质的蝶阀(单向压) Butterfly valve with one way flow direction to cut off the medium(One way pressure)

2.蝶阀驱动方式Butterfly Valve Operator Type

3	6	7	9
蜗轮驱动 Worm gear drive	气动装置驱动 Pneumatic Operator	液动装置驱动 Hydraulic Operator	电动装置驱动 Electrical Operator

3.蝶阀连接方式Butterfly Valve Connection Type

4	6	7	8
法兰式 Flange Type	对焊式 Butt welding Type	对夹式 Wafer Type	凸耳式 Lug Type

4.蝶阀结构型式Butterfly Valve Structure Type

1	2	3
中线 Concentric	双偏心 Double-eccentric	三偏心 Triple-eccentric

5.密封面材料代号Sealing Surface Material Code

H	Y	X	F	W
合金钢 HRC30-45度 Alloy steel HRC30-45 Degree	司太立合金 HRC40-60度 Stellite Alloy HRC40-60 Degree	橡胶 Rubber	氟塑料 Fluorine Plastics	本体材料 Body Material

6.蝶阀公称压力Nominal Pressure of Butterfly Valve

1、用MPa的10倍值表示10 times of MPa Marks
2、用磅级表示Pound Level Marks

7.阀体材料代号Body Material Code

阀体材料 Body material	碳钢 carbon steel	合金钢 Alloy Steel	铬镍系不锈钢 Chromium Nickel Steel	铬镍钼系不锈钢 Cr.Ni.Mo. Steel
代号Code	C	I	P	R

Bi-direction metal-to-metal butterfly valve

双向等压硬对硬蝶阀

GB

设计标准：JB/T8527
Design standard: JB/T8527

法兰标准：GB/T9113
Flange standard: GB/T9113

试压标准：GB/T13927
Pressure test standard: GB/T13927

API

设计标准：API609
Design standard: API609

法兰标准：ASTM B16.5、16.47
Flange standards: ASTM B16.5, 16.47

试压标准：API598
Pressure test standard: API598

EN

设计标准：EN 593
Design standard: EN 593

法兰标准：EN 1092
Flange standard: EN 1092

试压标准：ISO 5208
Pressure test standard: ISO 5208

GOST

设计标准：EN 593
Design standard: EN 593

法兰标准：GOST 12815
Flange standard: GOST 12815

试压标准：ISO 5208
Pressure test standard: ISO 5208

双向等压硬对硬蝶阀

Bi-direction metal-to-metal butterfly valve

bi-direction metal seal butterfly valve analyzed the sealing force, discs bending and stem bending when the medium flows in the reverse direction. Using the floating seat structure to prevent effectively the butterfly valve sealing performance descending when pressure under reverse direction in pipeline. To make valves can withstand up to 11.0Mpa pressure in both direction. Without loss operation performance of butterfly valve. Mactor® bi-direction metal seal butterfly valve can customize material of body, disc and stem as well as sealing surface to according customer requirement and working conditions. The range of production can up to DN2000 and PN100 or 900LB. The products are suitable for all the condition which has bi-direction requirement.

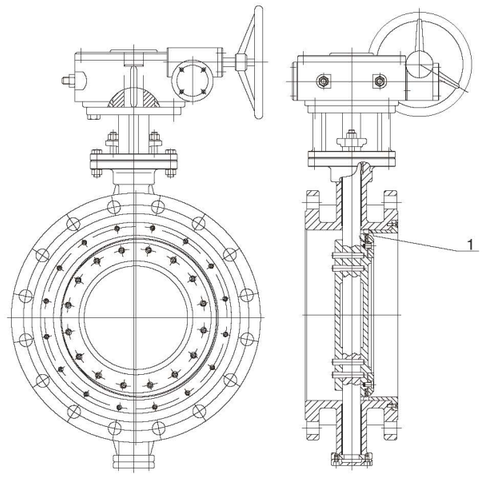

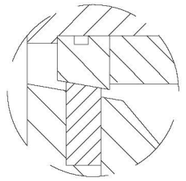

产品特点 Product Features

- 浮动阀座设计
- 双向1:1等压密封性能
- 多种连接形式
- 高压力、零泄露
- 可选配齿轮箱、电动或气动执行机构

- Floating seat design
- Bidirectional 1:1 equal pressure sealing performance
- Multiple connection forms
- High pressure, zero leakage
- Allow gearbox\electric\pneumatic actuator assembly

材料配置 Materials

阀体 Body	WCB,LCB,CF8,CF8M,CF3,CF3M,C95800,2205 …
蝶板 Disc	WCB,LCB,CF8,CF8M,CF3,CF3M,C95800,2205 …
阀座 Seat	304、316…
密封圈 Sealing	304+氮化，316+氮化，2205+氮化 304+nitriding, 316+nitriding, 2205+nitriding
阀杆 Stem	2Cr13，304，316，17-4ph，Monel K500
轴套 Bearing	自润滑复合铜套 Self-lubricating composite copper sleeve
填料 Stem Packing	石墨、PTFE Graphite, PTFE

生产范围 Range of production

公称通径 DN/mm, NPS/in	DN50-DN2000
压力范围 Pressure Range	PN6,PN10,PN25,PN40,PN63,PN100, 150LB,300LB,600LB,900LB
操作方式 Operation	手柄、齿轮箱、电动执行器、气动执行器 Handle, gear box, electric actuator, pneumatic actuator
连接形式 Connection	法兰、对夹、凸耳、对焊 Flange, butt clamp, lug, butt welding

Butt-welded metal-to-metal butterfly valve

对焊式硬对硬蝶阀

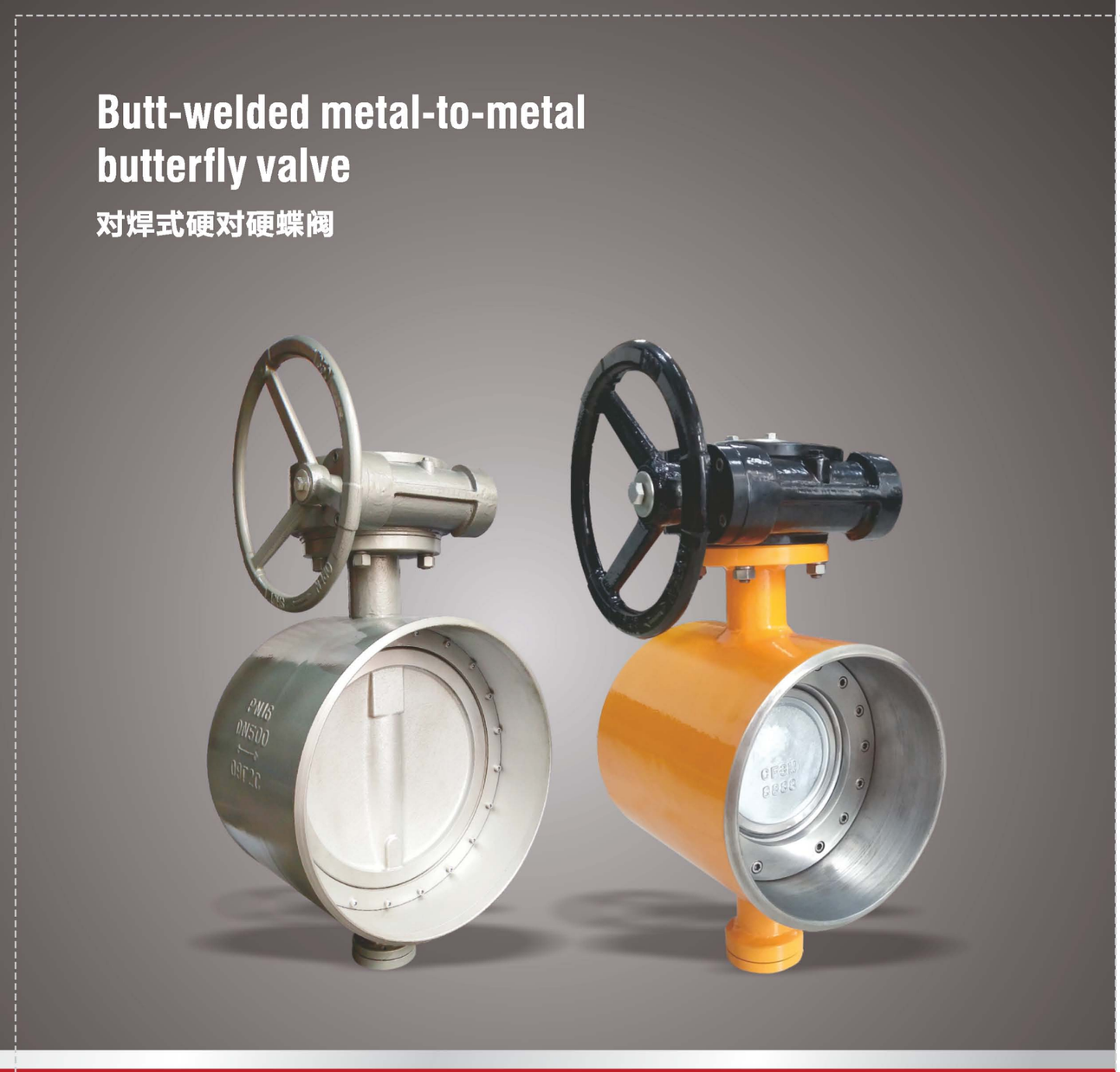

GB

设计标准：JB/T8527
Design standard: JB/T8527

结构长度标准：ISO 5752
Structure length standard: ISO5752

试压标准：GB/T13927
Pressure test standard: GB/T13927

API

设计标准：API609
Design standard: API609

结构长度标准：ASME B16.25
Structure length standard: ASME B16.25

试压标准：API598
Pressure test standard: API598

GOST

设计标准：EN593
Design standard: EN593

结构长度标准：ISO 5752
Structure length standard: ISO5752

试压标准：ISO5208
Pressure test standard: ISO5208

对焊式硬对硬蝶阀

Butt-welded metal-to-metal butterfly valve

butt-welded metal-to-metal butterfly valve is developed by Zhejiang Mactor Heavy Industries Co.,ltd. For heat-line working condition. And combined with excellent product structure at global world market. Compared with normal triple-offset butterfly valve, the Mactor®butt-welded metal-to-metal butterfly valve using full-metal sealing, which has the advantages of abrasion, high temperaure and erosion resistance. And the sealing performance keep in "Zero Leakage", will not be affected. Mactor®butt-welded metal-to-metal butterfly valve considers many factors in product designing, and improves the product structure. For example, the metal expansion caused by the temperature difference between the internal and external environment of pipeline. And the valves using floating U-type seat design to prevent the problem of temperature changes. Our products has exported to Russia and other high-latitude country, and be a part in the construction of indigenous heat-line projects.

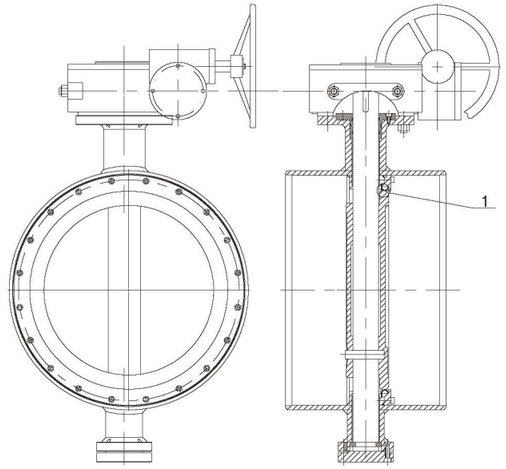

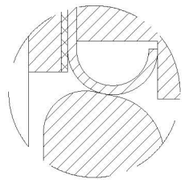

产品特点 Product Features

- 全金属硬密封结构
- 高硬度合金耐磨阀座
- 双向等压密封零泄露
- 全焊接结构
- 高Kv流通值
- 防咬死阀座结构
- 阀门重量轻
- 可选配齿轮箱、电动或气动执行机构

- Full-metal sealing
- High hardness alloy wear-resistant seat
- bi-direction sealing zero leakage
- full-welded structure
- High KV value
- Anti-seize valve seat structure
- Light weight
- Allow gearbox\electric\pneumatic actuator assembly

材料配置 Materials

阀体 Body	Q235A，Q345B，304，12Mn，16Mn
蝶板 Disc	WCB，LCB，CF8
阀座 Seat	304，2205, Inconel
密封圈 Sealing	蝶板本体密封 Disc sealing
阀杆 Stem	2Cr13，304，316，17-4ph
轴套 Bearing	自润滑复合铜套 Self-lubricating composite copper sleeve
填料 Stem Packing	编织石墨盘根、PTFE Braided graphite packing, PTFE

生产范围 Range of production

公称通径 DN/mm, NPS/in	DN200-DN1200
压力范围 Pressure Range	PN6, PN10, PN16, PN25, 150LB
操作方式 Operation	齿轮箱、电动执行器、气动执行器 Gear box, electric actuator, pneumatic actuator
连接形式 Connection	对焊 Butt welding

High-performance butterfly valve

高性能蝶阀

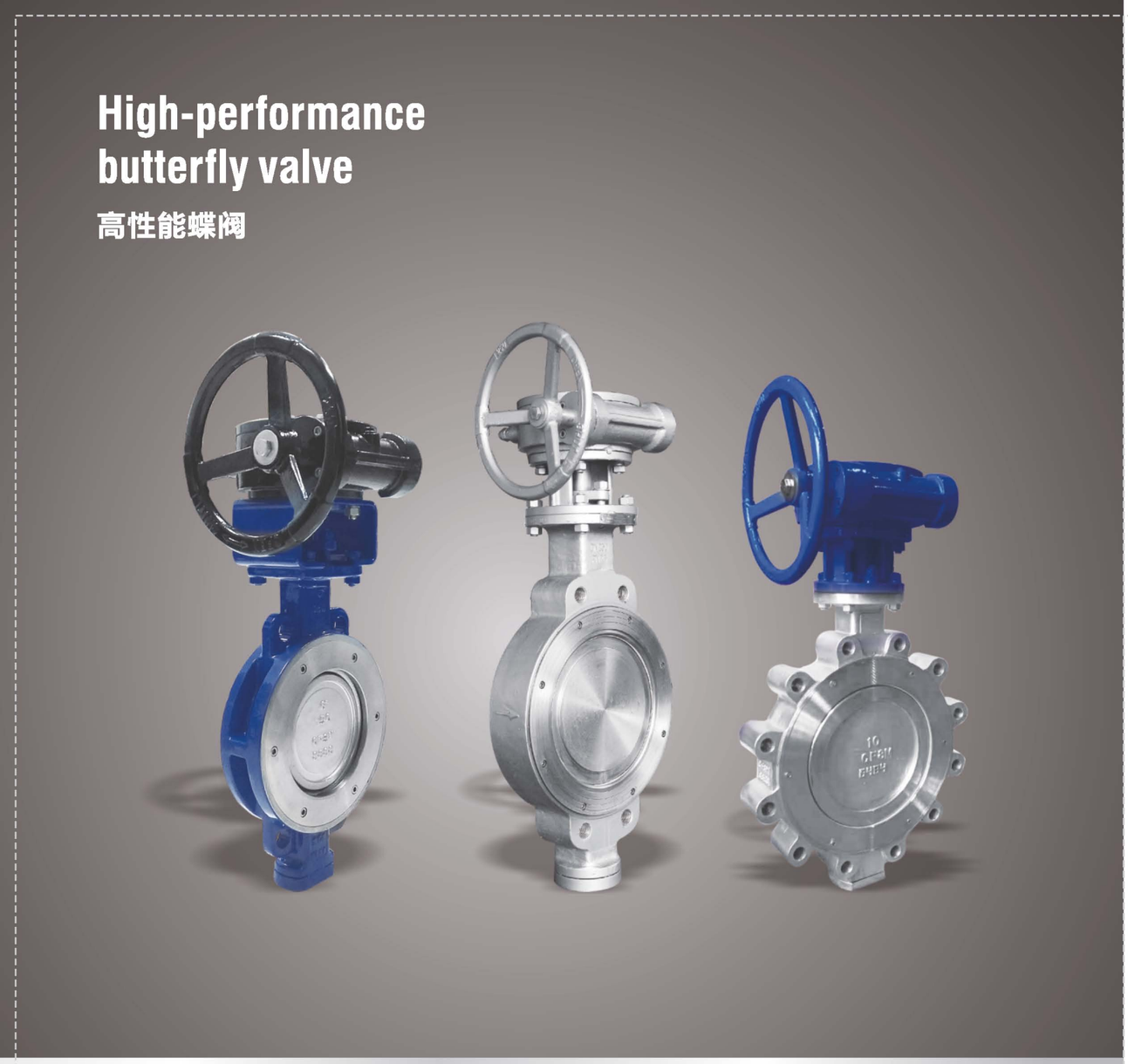

GB	API	EN	GOST
设计标准：JB/T8527 Design standard: JB/T8527	设计标准：API609 Design standard: API609	设计标准：EN 593 Design standard: EN 593	设计标准：EN 593 Design standard: EN 593
法兰标准：GB/T9113 Flange standard: GB/T9113	法兰标准：ASTM B16.5、16.47 Flange standards: ASTM B16.5, 16.47	法兰标准：EN 1092 Flange standard: EN 1092	法兰标准：GOST 12815 Flange standard: GOST 12815
试压标准：GB/T13927 Pressure test standard: GB/T13927	试压标准：API598 Pressure test standard: API598	试压标准：ISO 5208 Pressure test standard: ISO 5208	试压标准：ISO 5208 Pressure test standard: ISO 5208

高性能蝶阀

High-performance butterfly valve

high-performance butterfly valve using double-offset, floading seat design. With circular disc sealing surface, can withstand bi-direction pressure of the pipeline medium. Compared with conventional butterfly valves. Mactor® high-performance butterfly valve have the advantages of smaller operation torque and longer service life. Depending on the property, temperature and pressure of the medium. The sealing can be selectable between PTFE/RTFE or stainless steel.

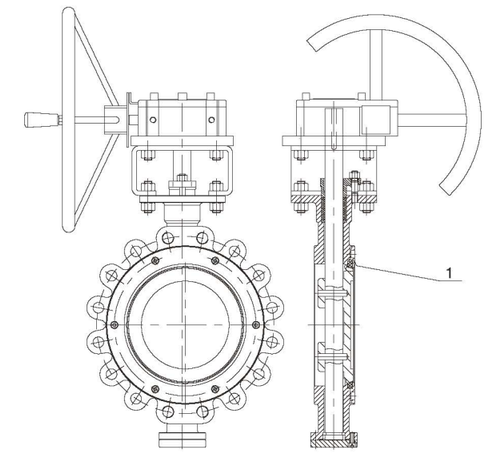

产品特点 Product Features

- 开关力矩轻，使用寿命长
- 阀座选用进口高分子材料或不锈钢
- V型PTFE轴线或编织石墨填料
- 可更换阀座
- 密封面摩擦损耗小
- 双向密封

- Light switching torque and long service life
- The valve seat is made of imported polymer material or stainless steel
- V-shaped PTFE axis or braided graphite packing
- Replaceable seat
- Small friction loss on the sealing surface
- Two-way sealing

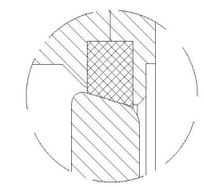

材料配置 Materials

阀体 Body	WCB,LCB,CF8,CF8M,CF3,CF3M,C95800,2205 …
蝶板 Disc	WCB,LCB,CF8,CF8M,CF3,CF3M,C95800,2205 …
阀座 Seat	PTFE、RPTFE、304、316、Inconel
密封圈 Sealing	蝶板本体密封 Disc sealing
阀杆 Stem	304、316、17-4ph、C63000、Monel K500
轴套 Bearing	自润滑复合轴套 Self-lubricating composite bushing
填料 Stem Packing	PTFE，编织石墨盘根 PTFE, braided graphite packing

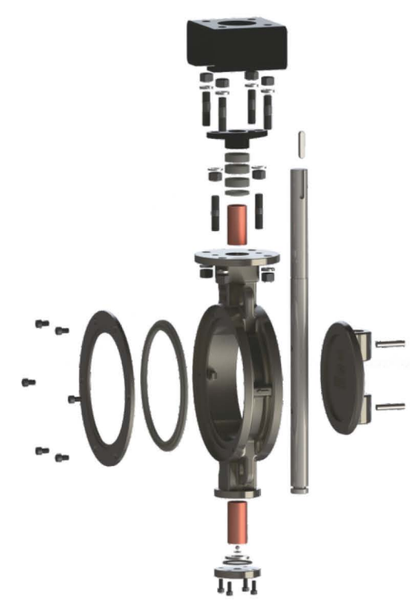

生产范围 Range of production

公称通径 DN/mm, NPS/in	DN50-DN1200
压力范围 Pressure Range	PN6-PN40,150LB-300LB
操作方式 Operation	手柄、齿轮箱、电动执行器、气动执行器 Handle, gear box, electric actuator, pneumatic actuator
连接形式 Connection	法兰、对夹、凸耳、对焊 Flange, butt clamp, lug, butt welding

Triple Eccentric Butterfly Valve

三偏心多层次密封蝶阀

GB

设计标准：JB/T8527
Design standard: JB/T8527

法兰标准：GB/T9113
Flange standard: GB/T9113

试压标准：GB/T13927
Pressure test standard: GB/T13927

API

设计标准：API609
Design standard: API609

法兰标准：ASTM B16.5、16.47
Flange standards: ASTM B16.5, 16.47

试压标准：API598
Pressure test standard: API598

EN

设计标准：EN 593
Design standard: EN 593

法兰标准：EN 1092
Flange standard: EN 1092

试压标准：ISO 5208
Pressure test standard: ISO 5208

GOST

设计标准：EN 593
Design standard: EN 593

法兰标准：GOST 12815
Flange standard: GOST 12815

试压标准：ISO 5208
Pressure test standard: ISO 5208

Triple Eccentric Butterfly Valve's zero leakage is achieved by the elasticity of the sealing ring on the butterfly plate. The elasticity of the sealing ring (as shown on the right) is produced by its radial compression and soft movement. The contact surface between the sealing ring and the valve seat is an oblique cone. The contact angle between the sealing ring and the valve seat produces a slight "wedge effect" which causes the sealing ring to softly move and compress radially. Due to the uniform contact between the valve seat and the sealing ring and the flexibility of the sealing ring, the load on the valve seat is even, so that the tightest cut-off can be achieved with the smallest torque. The elasticity produced by the torque makes the valve close tightly, regardless of the direction of the medium flow or the medium force.

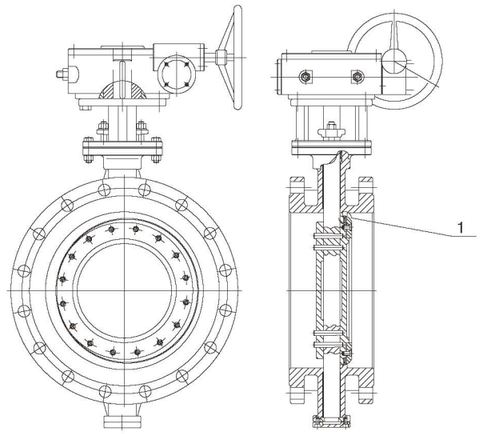

产品特点 Product Features

- 双重安全构造
- 无死区设计
- 可更换式密封副
- 均衡固定结构

- Double safety structure
- No dead zone design
- Replaceable seal pair
- Balanced fixed structure

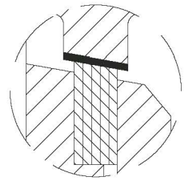

材料配置 Materials

阀体 Valve body	铸钢、不锈钢、蒙乃尔 Cast steel, stainless steel, Monel
蝶板 Butterfly board	铸钢、不锈钢、蒙乃尔 Cast steel, stainless steel, Monel
密封圈 Sealing ring	SS+柔性石墨、PTFE+SS SS+flexible graphite, PTFE+SS
阀杆 Stem	45#、不锈钢、蒙乃尔 45#, stainless steel, Monel
轴套 Shaft sleeve	自润滑黄铜 Self-lubricating brass
填料 Filler	石墨、PTFE Graphite, PTFE

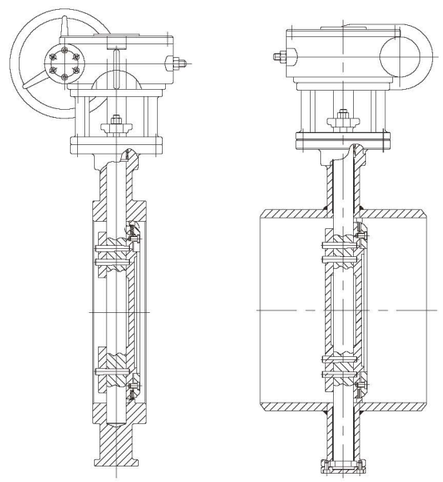

生产范围 Range of production

公称通径 DN/mm, NPS/in	DN80-DN3000
压力范围 Pressure range	PN6~PN100、150LB~900LB
操作方式 Operation method	手柄、齿轮箱、电动执行器、气动执行器 Handle, gear box, electric actuator, pneumatic actuator
连接形式 Connection Type	法兰、对夹、凸耳、对焊 Flange, butt clamp, lug, butt welding

Triple Eccentric metal-to-metal Butterfly Valve

三偏心硬对硬蝶阀

GB

设计标准：JB/T8527
Design standard: JB/T8527

法兰标准：GB/T9113
Flange standard: GB/T9113

试压标准：GB/T13927
Pressure test standard: GB/T13927

API

设计标准：API609
Design standard: API609

法兰标准：ASTM B16.5、16.47
Flange standards: ASTM B16.5, 16.47

试压标准：API598
Pressure test standard: API598

EN

设计标准：EN 593
Design standard: EN 593

法兰标准：EN 1092
Flange standard: EN 1092

试压标准：ISO 5208
Pressure test standard: ISO 5208

GOST

设计标准：EN 593
Design standard: EN 593

法兰标准：GOST 12815
Flange standard: GOST 12815

试压标准：ISO 5208
Pressure test standard: ISO 5208

三偏心硬对硬蝶阀

Triple Eccentric metal-to-metal Butterfly Valve

Zero leakage is achieved by the elasticity of the sealing ring on the butterfly plate. The elasticity of the sealing ring (as shown on the right) is produced by its radial compression and soft movement. The contact surface between the sealing ring and the valve seat is an oblique cone. The contact angle between the sealing ring and the valve seat produces a slight "wedge effect" which causes the sealing ring to softly move and compress radially. Due to the uniform contact between the valve seat and the sealing ring and the flexibility of the sealing ring, the load on the valve seat is even, so that the tightest cut-off can be achieved with the smallest torque. The elasticity produced by the torque makes the valve close tightly, regardless of the direction of the medium flow or the medium force.

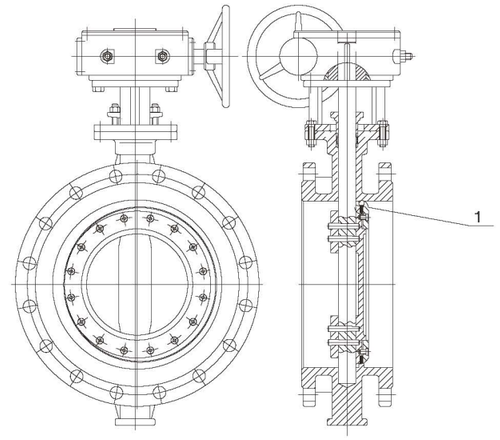

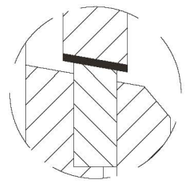

产品特点 Product Features

- 耐磨耐冲刷
- 适应高流速介质
- 可用于沥青管道
- 全金属硬密封结构
- 高硬度合金耐磨阀座
- 防咬死阀座结构
- 可选配齿轮箱、电动或气动执行机构

- Wear resistant and erosion resistant
- Adapt to high velocity medium
- Can be used for asphalt pipeline
- All metal hard seal structure
- High hardness alloy wear-resistant valve seat
- Anti-seize valve seat structure
- Allow gearbox\electric\pneumatic actuator assembly

材料配置 Materials

阀体 Valve body	铸钢、不锈钢、蒙乃尔 Cast steel, stainless steel, Monel
蝶板 Butterfly board	铸钢、不锈钢、蒙乃尔 Cast steel, stainless steel, Monel
密封圈 Sealing ring	304、316、2205
阀杆 Stem	45#、不锈钢、蒙乃尔 45#, stainless steel, Monel
轴套 Shaft sleeve	自润滑黄铜 Self-lubricating brass
填料 Filler	石墨、PTFE Graphite, PTFE

生产范围 Range of production

公称通径 DN/mm, NPS/in	DN50-DN2000
压力范围 Pressure range	PN6,PN10,PN16,PN25,PN40,150LB,300LB
操作方式 Operation method	手柄、齿轮箱、电动执行器、气动执行器 Handle, gear box, electric actuator, pneumatic actuator
连接形式 Connection Type	法兰、对夹、凸耳 Flange, butt clamp, lug

Double-offset resilient seat butterfly valve

双偏心软密封蝶阀

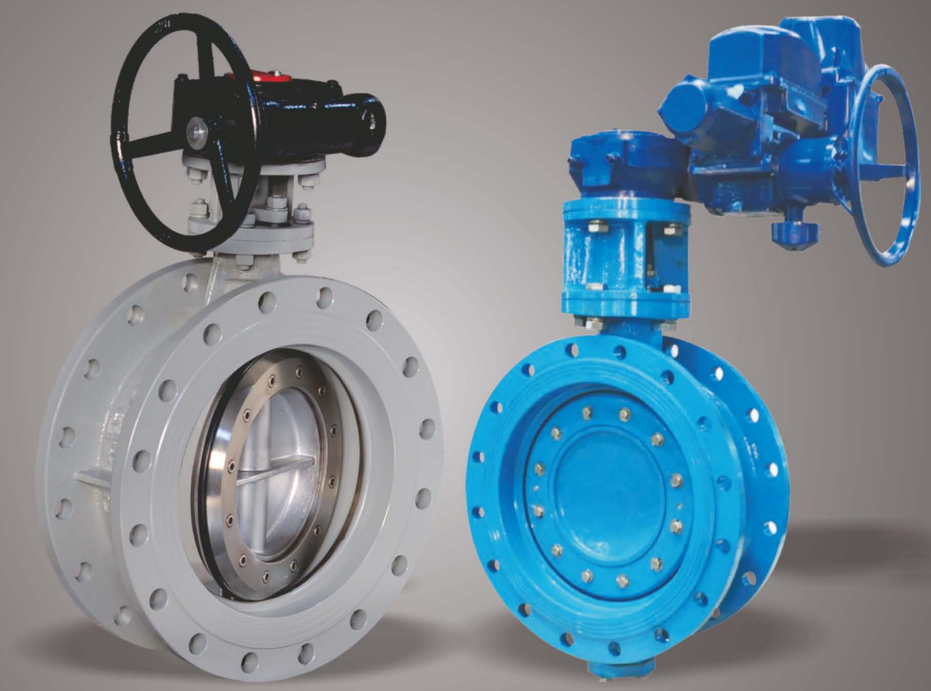

GB　API　EN　GOST

设计标准：JB/T8527
Design standard: JB/T8527

法兰标准：GB/T9113
Flange standard: GB/T9113

试压标准：GB/T13927
Pressure test standard: GB/T13927

设计标准：API609
Design standard: API609

法兰标准：ASTM B16.5、16.47
Flange standards: ASTM B16.5, 16.47

试压标准：API598
Pressure test standard: API598

设计标准：EN 593
Design standard: EN 593

法兰标准：EN 1092
Flange standard: EN 1092

试压标准：ISO 5208
Pressure test standard: ISO 5208

设计标准：EN 593
Design standard: EN 593

法兰标准：GOST 12815
Flange standard: GOST 12815

试压标准：ISO 5208
Pressure test standard: ISO 5208

双偏心软密封蝶阀

Double-offset resilient seat butterfly valve

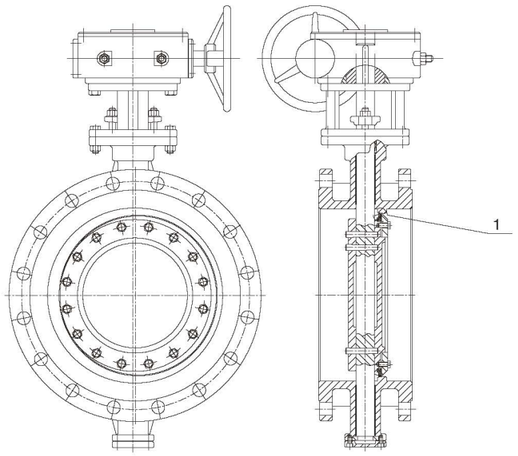

double-offset butterfly valve widely used in bydraulic construction all over the global world. Export products to Russia, South America and Southeast Asia countries and widely recognized by customers.

The structural characteristics of both the stem axis eccentric butterfly plate center also deviated from the body center. Double eccentric effect causes the valve is turned on the butterfly plate can quickly from the valve seat, substantially to eliminate the unnecessary disc and valve seat excessive squeeze, scratch phenomenon, reduce the resistance from the open, reducing the wear and increasing the service life of the valve seat, scraping is greatly reduced.

产品特点 Product Features

- 双向密封
- 不锈钢堆焊阀座
- 不锈钢密封压板（选配）
- 密封面耐腐蚀耐老化
- 环氧树脂喷涂(选配)
- 可选配齿轮箱、气动或电动执行机构

- Two-way sealing
- Stainless steel surfacing valve seat
- Stainless steel sealing plate (optional)
- The sealing surface is resistant to corrosion and aging
- Epoxy resin spray (optional)
- Allow gearbox\electric\pneumatic actuator assembly

材料配置 Materials

阀体 Body	QT450 WCB
蝶板 Disc	QT450 WCB 304
阀座 Seat	堆焊304 Surfacing 304
密封圈 Sealing	NBR EPDM VITON
阀杆 Stem	2Cr13 304 316 17-4ph

生产范围 Range of production

公称通径 DN/mm, NPS/in	DN50-DN2400
压力范围 Pressure Range	PN6-PN25，150LB
操作方式 Operation	手柄、齿轮箱、电动执行器、气动执行器 Handle, gear box, electric actuator, pneumatic actuator
连接形式 Connection	法兰 Flange

API concentric rubber lined butterfly valve

美标中线蝶阀

API

设计标准：API609
Design standard: API609

法兰标准：ASTM B16.5、16.47
Flange standards: ASTM B16.5, 16.47

试压标准：API598
Pressure test standard: API598

美标中线蝶阀
API concentric rubber lined butterfly valve

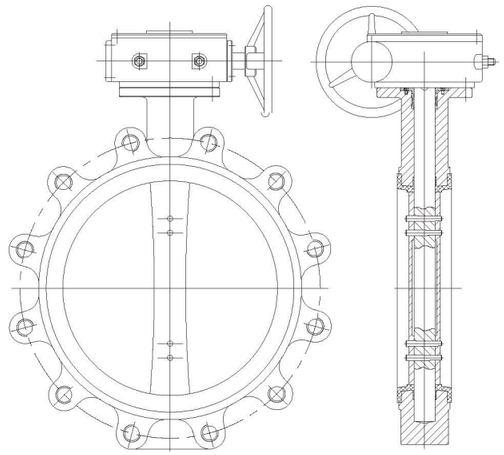

concentric rubber lined butterfly valve has history of manufacture for over 20 years. The vulcanized rubber-lined creafting is inherited from Oubei rubber factory. From rubber material selection to mold designing.From vulcanizing agent ratio to temperatiure control. Be taught by the master of polymer chemistry in the United States as cheif engineer of the factory at the time. Mactor® always keep the same quality. Under the current situation that the pressure testing pressure of the centerline rubber-lined butterfly valve on the market generally does not exceed PN16. Mactor® with its advantages of technical. Make the concentric linner butterfly valve reach to 150LB standarded testing pressure. And still maintain high quality with "Zero leakage". Some small diameters can reach to 2.75Mpa(PN25) testing pressure.

产品特点 Product Features

- 可承受150LB压力试验标准
- 全系列精铸
- 自备衬胶模具
- 厚型阀座，产品经久耐用
- 阀座在蝶板快速启闭时不易撕烂
- 重型阀体，材质达标
- 可选配齿轮箱、气动或电动执行机构

- Can withstand 150LB pressure test standards
- Full range of precision casting
- Bring your own rubber mould
- Thick valve seat, durable product
- The valve seat is not easy to tear when the butterfly plate is opened and closed quickly
- Heavy-duty valve body, material up to standard
- Allow gearbox\electric\pneumatic actuator assembly

材料配置 Materials

阀体 Body	QT450,WCB,LCB,CF8,CF8M,C95800 ···
蝶板 Disc	QT450,WCB,LCB,CF8,CF8M,C95800 ···
阀座 Seat	NBR EPDM VITON···
密封圈 Sealing	蝶板本体密封 Disc sealing
阀杆 Stem	2Cr13 304 316 17-4ph

生产范围 Range of production

公称通径 DN/mm, NPS/in	DN50-DN1400
压力范围 Pressure Range	PN6 PN10 PN16 PN25(部分口径), 150LB PN6 PN10 PN16 PN25 (partial caliber), 150LB
操作方式 Operation	手柄、齿轮箱、电动执行器、气动执行器 Handle, gear box, electric actuator, pneumatic actuator
连接形式 Connection	法兰、对夹、凸耳 Flange, clip, lug

浙江迈拓拥有全套硫化衬胶模具
Mactor® has a full set of vulcanized rubber lining molds

Butterfly type check valve

蝶式缓闭止回阀

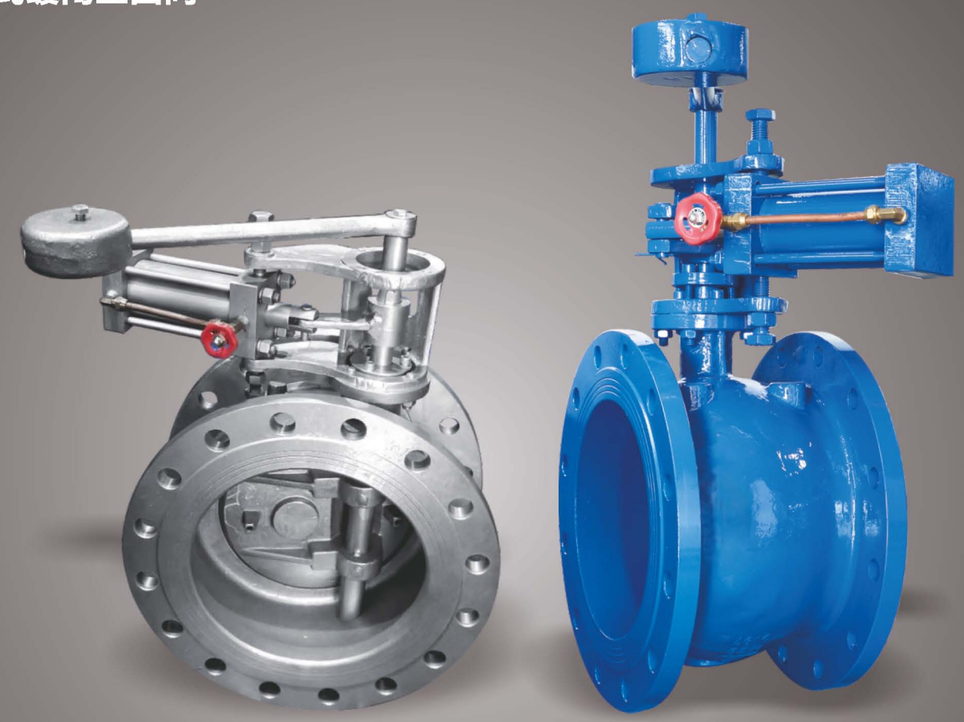

GB

设计标准：JB/T8527
Design standard: JB/T8527

法兰标准：GB/T9113
Flange standard: GB/T9113

试压标准：GB/T13927
Pressure test standard: GB/T13927

EN

设计标准：EN 593
Design standard: EN 593

法兰标准：EN 1092
Flange standard: EN 1092

试压标准：ISO 5208
Pressure test standard: ISO 5208

GOST

设计标准：EN 593
Design standard: EN 593

法兰标准：GOST 12815
Flange standard: GOST 12815

试压标准：ISO 5208
Pressure test standard: ISO 5208

butterfly type check valve is mainly used in various pipelines to prevent the backflow of medium. The unique slow-closing design can effectively prevent water hammer and protect pipeline and pump. According to the different medium property, Mactor® butterfly type check valve can choose metal sealing or rubber sealing for the sealing surface.

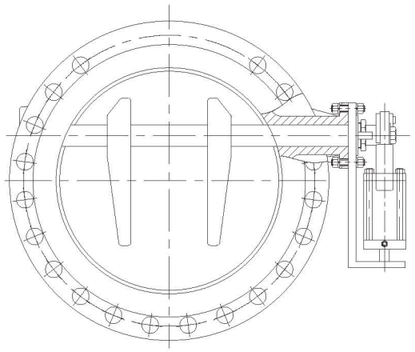

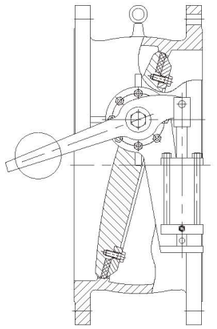

产品特点 Product Features

- 蝶板缓闭防止水锤作用造成管道损坏
- 可适应多种介质
- 可根据介质不同选用金属或橡胶密封
- 最大公称压力PN25
- 最大生产口径DN2000
- 环氧树脂喷涂（选配）

- The butterfly plate is slowly closed to prevent damage to the pipeline caused by water hammer
- Can adapt to a variety of media
- Metal or rubber seals can be selected according to different media
- Maximum nominal pressure PN25
- Maximum production caliber DN2000
- Epoxy resin spray (optional)

材料配置 Materials

阀体 Body	QT450 WCB
蝶板 Disc	QT450 WCB
密封压板 Seat	Q235,304
密封圈 Sealing	NBR,EPDM（软密封）304+石墨（硬密封） NBR, EPDM (soft seal) 304 + graphite (hard seal)
阀杆 Stem	2Cr13,304,17-4ph

生产范围 Range of production

公称通径 DN/mm, NPS/in	DN50-DN2000
压力范围 Pressure Range	PN6 PN10 PN16 PN25
连接形式 Connection	法兰 Flange
缓闭结构 Slow-closing device	液压 Hydraulic

国标、德标对夹式蝶阀主要连接尺寸
GB, EN Main connection dimensions of wafer butterfly valve

表 Table1

公称通径 Nominal diameter (DN)	L1（短系列）(Short series)	L2（长系列）(Long series)	PN0.6(MPa)			PN1.0(MPa)			PN1.6(MPa)		
			D1	D2	z-φd	D1	D2	z-φd	D1	D2	z-φd
50	43	43	110	90	4-14	125	102	4-18	125	102	4-18
65	46	46	130	110	4-14	145	122	4-18	145	122	4-18
80	49	64	150	128	4-18	160	138	4-18	160	138	4-18
100	56	64	170	148	4-18	180	158	4-18	180	158	4-18
125	64	70	200	178	4-18	210	188	4-18	210	188	4-18
150	70	76	225	202	4-18	240	212	4-22	240	212	4-22
200	71	89	280	258	4-18	295	268	4-22	295	268	4-22
250	76	114	335	312	4-18	350	320	4-22	355	320	4-26
300	83	114	395	365	4-22	400	370	4-22	410	378	4-26
350	92	127	445	415	4-22	460	430	4-M20	470	438	4-M24
400	102	140	495	465	4-M20	515	482	4-M24	525	490	4-M27
450	114	152	550	520	4-M20	565	532	4-M24	585	550	4-M27
500	127	152	600	570	4-M20	620	585	4-M24	650	610	4-M30
600	154	178	705	670	4-M24	725	685	4-M27	770	725	4-M33
700	165	229	810	775	4-M24	840	800	4-M27	840	795	4-M33
800	190	241	920	880	4-M27	950	905	4-M30	950	900	4-M36
900	203	241	1020	980	4-M27	1050	1005	4-M30	1050	1000	4-M36
1000	216	300	1120	1080	4-M27	1160	1110	4-M33	1170	1115	4-M39
1200	254	360	1340	1295	4-M30	1380	1330	4-M36	1390	1330	4-M45
1400	279	390	1560	1510	4-M33	1590	1535	4-M39	1590	1530	4-M45
1600	318	440	1760	1710	4-M33	1820	1760	4-M45	1820	1750	4-M52

表 Table2

公称通径 Nominal diameter (DN)	L1（短系列）(Short series)	L2（长系列）(Long series)	PN2.5(MPa)			PN4.0(MPa)			PN6.3(MPa)		
			D1	D2	z-φd	D1	D2	z-φd	D1	D2	z-φd
50	43	43	125	102	4-18	125	102	4-18	135	102	4-22
65	46	46	145	122	4-18	145	122	4-18	160	122	4-22
80	49	64	160	138	4-18	160	138	4-18	170	138	4-22
100	56	64	190	162	4-22	190	162	4-22	200	162	4-26
125	64	70	220	188	4-26	220	188	4-26	240	188	4-30
150	70	76	250	218	4-26	250	218	4-26	280	218	4-33
200	71	89	310	278	4-26	320	285	4-M27	345	285	4-M33
250	76	114	370	335	4-30	385	345	4-M30	400	345	4-M33
300	83	114	430	395	4-M27	450	410	4-M30	460	410	4-M33
350	92	127	490	450	4-M30	510	465	4-M33	525	465	4-M36
400	102	140	550	505	4-M33	585	535	4-M36	585	535	4-M39
450	114	152	600	555	4-M33	610	560	4-M36	–	–	–
500	127	152	660	615	4-M33	670	615	4-M39	–	–	–
600	154	178	770	720	4-M36	795	735	4-M45	–	–	–
700	165	229	875	820	4-M39	–	–	–	–	–	–
800	190	241	990	930	4-M45	–	–	–	–	–	–
900	203	241	1090	1030	4-M45	–	–	–	–	–	–
1000	216	300	1210	1140	4-M52	–	–	–	–	–	–
1200	254	360	1420	1350	4-M52	–	–	–	–	–	–

上表仅提供部分数据作参考，不代表我司生产范围。具体数据可在询价时索要小样图。
The above table only provides part of the data for reference and does not represent the scope of our company's production. Specific data can be asked for a small sample map when inquiring.

附录一：主要连接尺寸
Appendix 1: Main connection dimensions

美标对夹式蝶阀主要连接尺寸
API Main connection dimensions of wafer butterfly valve

表 Table 3

公称通径 Nominal diameter (DN)	NPS	150Lb							300Lb						
		L	D	D1	D2	n-d	C	f	L	D	D1	D2	n-d	C	f
50	2"	43	150	120.5	92	4-φ19	16	2	43	165	127	92	8-φ18	22.5	2
65	2 1/2"	46	180	139.5	105	4-φ19	18	2	46	190	149	105	8-φ22	25.5	2
80	3"	48	190	152.5	127	4-φ19	19	2	48	210	168.1	127	8-φ22	29	2
100	4"	54	230	190.5	157	8-φ19	24	2	54	254	200.1	157	8-φ22	32	2
125	5"	56	255	216	186	8-φ22	24	2	59	280	234.9	186	8-φ22	35	2
150	6"	57	280	241.5	216	8-φ22	26	2	59	318	269.3	216	12-φ22	37	2
200	8"	64	345	298.5	270	8-φ22	29	2	73	381	330.2	270	12-φ26	41.5	2
250	10"	71	405	362	324	12-φ26	31	2	83	445	387.3	324	16-φ29	48	2
300	12"	81	485	432	381	12-φ26	32	2	92	521	450.8	381	16-φ32	51	2
350	14"	92	535	476	413	12-φ29	35	2	117	585	514.3	413	20-φ32	54	2
400	16"	102	595	540	470	16-φ29	37	2	133	650	571.5	470	20-φ35	57.5	2
450	18"	114	635	578	533	16-φ32	40	2	149	712	628.6	533	24-φ35	60.5	2
500	20"	127	700	635	584	20-φ32	43	2	159	775	685.8	584	24-φ35	63.5	2
550	22"	154	815	749.5	692	20-φ35	48	2							
600	24"	154	749.3	692.15	641.35	20-φ35	46	2	181	915	812.8	692	24-φ42	70	2
650	26"	165	870	806.5	749	24-φ36	68.5	2	229	970	876.3	749	28-φ45	79.8	2
700	28"	165	927	863.6	800	28-φ36	71.5	2	229	1035	939.8	800	28-φ45	86.2	2
750	30"	165	984	914.4	857	28-φ36	75	2	229	1090	997	857	28-φ48	92.5	2
800	32"	190	1060.5	977.9	914	28-φ42	81	2	241	1150	1054.1	914	28-φ51	98.9	2
850	34"	203	1111	1028.7	965	32-φ42	83	2	241	1205	1104.9	965	28-φ51	102.1	2
900	36"	203	1168	1085.9	1022	32-φ42	90.5	2	241	170	1168.4	1022	32-φ55	105.2	2
950	38"	216	1238	1149.4	1073	32-φ42	87.5	2	241	1170	1192.2	1029	32-φ42	108.4	2
1000	40"	216	1289	1200.2	1124	36-φ42	90.5	2	300	1240	1155.7	1086	32-φ45	114.8	2
1050	42"	216	1346	1257.3	1194	36-φ42	97	2	300	1290	1206.5	1137	32-φ45	119.5	2
1100	44"	254	1403	1314.5	1245	40-φ42	102	2	360	1355	1263.6	1194	32-φ48	124.3	2
1150	46"	254	1454	1365.3	1295	40-φ42	103.5	2	360	1415	1320.8	1245	28-φ51	129	2
1200	48"	254	1511	1422.4	1359	44-φ42	108	2	360	1465	1371.6	1302	32-φ51	133.8	2
1250	50"	279	1568.5	1479.6	1410	44-φ48	111.5	2	360	1530	1428.8	1359	32-φ55	140.2	2
1300	52"	279	1625.5	1536.7	1461	44-φ48	116	2	390	1580	1479.6	1410	32-φ55	144.9	2
1350	54"	279	1683	1593.9	1511	44-φ48	121	2	390	1660	1549.4	1467	28-φ60	152.9	2
1400	56"	279	1746	1651	1575	48-φ48	124	2	390	1710	1600.2	1518	28-φ60	154.4	2
1450	58"	318	1803	1708.2	1626	48-φ48	129	2	440	1760	1651	1575	32-φ60	159.2	2
1500	60"	318	1854	1759	1676	52-φ48	132	2	440	1810	1701.8	1626	32-φ60	164	2

公称通径 Nominal diameter (DN)	NPS	600Lb							900Lb						
		L	D	D1	D2	n-d	C	f	L	D	D1	D2	n-d	C	f
100	4"	64	273	216	157	8-φ26	45.5	7	190	290	235	157	8-φ33	51.5	7
125	5"	78	330	266.7	186	8-φ29	51.5	7	200	350	279.4	186	8-φ36	57.8	7
150	6"	78	356	292.1	216	12-φ29	55	7	210	380	317.5	216	12-φ33	62.6	7
200	8"	102	419	349.3	270	12-φ32	62.5	7	230	470	393.7	270	12-φ39	70.5	7
250	10"	117	508	431.8	324	16-φ36	70.5	7	250	545	469.9	324	16-φ39	76.9	7
300	12"	140	559	489	381	20-φ36	74	7	270	610	533.4	381	20-φ39	86.4	7
350	14"	155	604	527	413	20-φ39	77	7	290	640	558.8	413	20-φ42	92.8	7
400	16"	178	686	603.3	470	20-φ42	83.5	7	310	705	616	470	20-φ45	95.9	7
450	18"	200	743	654.1	533	20-φ45	90	7	330	785	685.8	533	20-φ51	108.6	7
500	20"	216	813	723.9	584	24-φ45	96	7	350	855	749.3	584	20-φ55	115	7
600	24"	232	940	838.2	692	24-φ51	109	7	390	1040	901.7	692	20-φ68	146.7	7

上表仅提供部分数据作参考，不代表我司生产范围。具体数据可在询价时索要小样图。
The above table only provides part of the data for reference and does not represent the scope of our company's production. Specific data can be asked for a small sample map when inquiring.

国标、德标法兰式蝶阀主要连接尺寸
GB, EN Main connection dimensions of flanged butterfly valve

表 Table4

公称通径 Nominal diameter (DN)	L1	D2	PN0.6(MPa)				PN1.0(MPa)				PN1.6(MPa)				PN2.5(MPa)			
			D	D1	b	z-ϕd	D	D1	b	z-ϕd	D	D1	b	z-ϕd	D	D1	b	z-ϕd
50	108	99	140	110	16	4-14	165	125	20	4-18	165	125	20	4-18	165	125	20	4-18
80	114	132	190	150	18	4-18	200	160	20	4-18	200	180	20	4-18	200	160	24	4-18
100	127	156	210	170	18	4-18	220	180	22	4-18	220	180	22	4-18	235	190	24	4-22
125	140	184	240	200	18	4-18	250	210	22	4-18	250	210	22	4-18	270	220	26	4-26
150	140	211	265	225	20	4-18	285	240	24	4-22	285	240	24	4-22	300	250	28	4-26
200	152	266	320	280	22	4-18	340	295	24	4-22	340	295	24	8-22	360	310	30	8-26
250	165	319	375	335	24	8-18	395	350	26	8-22	405	355	26	8-26	425	370	32	8-30
300	178	370	440	395	21	8-22	445	400	26	8-22	460	410	28	8-26	485	430	34	12-30
350	190	429	490	445	24	8-22	505	460	26	12- 22	520	470	30	12-26	555	490	38	12-33
400	216	480	540	495	24	12-22	565	515	26	12-26	580	525	32	12-30	620	550	40	12-36
450	222	548	595	550	24	12-22	615	565	28	16-26	640	585	40	16-30	670	600	46	16-36
500	229	609	645	600	26	16-22	670	620	28	16-26	715	650	44	16-33	730	660	48	16-36
600	267	720	755	705	30	16-26	780	725	34	16-30	840	770	54	16-36	845	770	58	16-39
700	292	794	680	810	26	20-26	895	840	34	20-30	910	840	40	20-36	960	875	50	20-42
800	318	901	975	920	26	20-30	1015	950	36	20-33	1025	950	42	20-39	1085	990	54	20-48
900	330	1001	1075	1020	26	20-30	1115	1050	38	24-33	1125	1050	44	24-39	1185	1090	58	24-48
1000	410	1112	1175	1120	26	24-30	1230	1160	38	24-36	1255	1170	46	24-42	1320	1210	62	24-55
1200	470	1328	1405	1340	28	28-33	1455	1380	44	28-39	1485	1390	52	28-48	1530	1420	70	28-55
1400	530	1530	1630	1560	32	32-36	1675	1590	48	32-42	1685	1590	58	32-48	1755	1640	76	32-60
1600	600	1750	1830	1760	34	36-36	1915	1820	52	36-48	1930	1820	64	36-55	1975	1860	84	36-60
1800	670	1950	2045	1970	36	40-39	2115	2020	56	40-48	2130	2020	68	40-55	2195	2070	90	40-68
2000	760	2150	2265	2180	38	44-42	2325	2230	60	44-48	2345	2230	70	44-60	2425	2300	96	44-68

公称通径 Nominal diameter (DN)	L1	D2	PN4.0(MPa)				PN6.3(MPa)				PN10.0(MPa)			
			D	D1	b	z-ϕd	D	D1	b	z-ϕd	D	D1	b	z-ϕd
40	140	99	165	125	20	4-18	180	135	26	4-22	170	125	26	4-22
50	150	132	200	160	24	4-18	215	170	28	4-22	195	145	28	4-26
80	170	156	235	190	24	4-22	250	200	30	26	220	170	30	8-26
100	180	184	270	220	26	4-26	295	240	34	4-30	230	180	32	8-28
125	190	211	300	250	28	4-26	345	280	36	4-33	265	210	36	8-30
150	200	266	375	320	34	8-30	415	345	42	8-36	315	250	40	8-33
200	210	319	450	385	38	8-33	470	400	46	8-36	355	290	44	12-33
250	230	370	515	450	42	12-33	530	460	52	12-36	430	360	52	12-38
300	250	429	580	510	46	12-36	600	525	56	12-39	505	430	60	12-39
350	270	480	660	585	50	12-39	670	585	68	12-42	585	500	68	16-42
400	290	548	685	610	57	16-39	–	–	–	–	655	560	74	16-48
450	310	609	755	670	57	16-42	800	705	68	16-48	715	620	78	18-48
500	350	720	890	795	72	16-48	930	820	76	16-56	870	760	94	20-56

上表仅提供部分数据作参考，不代表我司生产范围。具体数据可在询价时索要小样图。
The above table only provides part of the data for reference and does not represent the scope of our company's production. Specific data can be asked for a small sample map when inquiring.

附录一：主要连接尺寸
Appendix 1: Main connection dimensions

美标法兰式蝶阀主要连接尺寸
API Main connection dimensions of flanged butterfly valve

表 Table 5

公称通径 Nominal diameter (DN)	NPS	150Lb								300Lb							
		L	D	D1	D2	n-d	C	f	螺栓UNC	L	D	D1	D2	n-d	C	f	螺栓UNC
50	2"	108	150	120.5	92	4-ϕ19	16	2	4-5/8"-11	150	165	127	92	8-ϕ18	22.5	2	8-5/8"-11
65	2 1/2"	112	180	139.5	105	4-ϕ19	18	2	4-5/8"-11	170	190	149	105	8-ϕ22	25.5	2	8-3/4"-10
80	3"	114	190	152.5	127	4-ϕ19	19	2	4-5/8"-11	180	210	168.1	127	8-ϕ22	29	2	8-3/4"-10
100	4"	127	230	190.5	157	8-ϕ19	24	2	8-5/8"-11	190	254	200.1	157	8-ϕ22	32	2	8-3/4"-10
125	5"	140	255	216	186	8-ϕ22	24	2	8-3/4"-10	200	280	234.9	186	8-ϕ22	35	2	8-3/4"-10
150	6"	140	280	241.5	216	8-ϕ22	26	2	8-3/4"-10	210	318	269.3	216	12-ϕ22	37	2	12-3/4"-10
200	8"	152	345	298.5	270	8-ϕ22	29	2	8-3/4"-10	230	381	330.2	270	12-ϕ26	41.5	2	12-7/8"-9
250	10"	165	405	362	324	12-ϕ26	31	2	12-7/8"-9	250	445	387.3	324	16-ϕ29	48	2	16-1"-8
300	12"	178	485	432	381	12-ϕ26	32	2	12-7/8"-9	270	521	450.8	381	16-ϕ32	51	2	16-1 1/8"-8
350	14"	190	535	476	413	12-ϕ29	35	2	12-1"-8	290	585	514.3	413	20-ϕ32	54	2	20-1 1/8"-8
400	16"	216	595	540	470	16-ϕ29	37	2	16-1"-8	310	650	571.5	470	20-ϕ35	57.5	2	20-1 1/4"-8
450	18"	222	635	578	533	16-ϕ32	40	2	16-1 1/8"-8	330	712	628.6	533	24-ϕ35	60.5	2	24-1 1/4"-8
500	20"	229	700	635	584	20-ϕ32	43	2	20-1 1/8"-8	350	775	685.8	584	24-ϕ35	63.5	2	24-1 1/4"-8
600	24"	267	815	749.5	692	20-ϕ35	48	2	20-1 1/4"-8	390	915	812.8	692	24-ϕ42	70	2	24-1 1/2"-8
650	26"	292	785	744.5	711	36-ϕ22	42	2	36-3/4"-8	410	865	803.3	737	36-ϕ36	89.4	2	32-1 1/4"-8
700	28"	292	835	795.3	762	40-ϕ22	45	2	40-3/4"-8	430	920	857.2	787	36-ϕ39	89.4	2	36-1 1/4"-8
750	30"	318	885	846.1	813	44-ϕ22	45	2	44-3/4"-8	450	990	920.8	845	32-ϕ42	94.1	2	36-1 3/8"-8
800	32"	318	940	900.1	864	48-ϕ22	46	2	48-3/4"-8	470	1055	977.9	902	36-ϕ42	103.6	2	32-1 1/2"-8
900	36"	330	1055	1009.6	972	44-ϕ26	53	2	44-7/8"-8	510	1170	1089	1010	32-ϕ45	103.6	2	32-1 5/8"-8
950	38"	410	1125	1070	1022	40-ϕ30	54	2	40-1"-8	530	1220	1139.8	1060	36-ϕ45	111.6	2	36-1 5/8"-8
1000	40"	410	1175	1120.8	1080	44-ϕ30	56	2	44-1"-8	550	1275	1190.6	1114	40-ϕ45	116.3	2	40-1 5/8"-8
1050	42"	410	1225	1171.6	1130	48-ϕ30	59	2	48-1"-8	570	1335	1244.6	1168	36-ϕ48	119.5	2	36-1 3/4"-8
1100	44"	410	1275	1222.4	1181	52-ϕ30	61	2	52-1"-8	630	1385	1295.4	1219	40-ϕ48	127.5	2	40-1 3/4"-8
1150	46"	410	1340	1284.3	1235	40-ϕ33	62	2	40-1 1/8"-8	630	1460	1365.2	1270	36-ϕ51	129	2	36-1 7/8"-8
1200	48"	470	1390	1335.1	1289	44-ϕ33	66	2	44-1 1/8"-8	630	1510	1416	1327	40-ϕ51	129	2	40-1 7/8"-8
1250	50"	470	1445	1386.9	1340	48-ϕ33	69	2	48-1 1/8"-8	710	1560	1466.8	1378	44-ϕ51	138.6	2	44-1 7/8"-8
1300	52"	470	1495	1436.7	1391	52-ϕ33	70	2	52-1 1/8"-8	710	1615	1517.6	1429	48-ϕ51	143.3	2	48-1 7/8"-8
1350	54"	470	1550	1492.2	1441	56-ϕ33	72	2	56-1 1/8"-8	710	1675	1578	1480	48-ϕ51	147	2	48-1 7/8"-8
1400	56"	530	1600	1543	1492	60-ϕ33	73	2	60-1 1/8"-8	710	1765	1651	1537	36-ϕ60	154.4	2	36-2 1/4"-8
1450	58"	530	1675	1611.3	1543	48-ϕ36	75	2	48-1 1/4"-8	790	1825	1712.9	1594	40-ϕ60	154.4	2	40-2 1/4"-8
1500	60"	530	1725	1662.1	1600	52-ϕ36	77	2	52-1 1/4"-8	790	1880	1763.7	1651	40-ϕ60	151.3	2	40-2 1/4"-8

公称通径 Nominal diameter (DN)	NPS	600Lb								900Lb							
		L	D	D1	D2	n-d	C	f	螺栓UNC	L	D	D1	D2	n-d	C	f	螺栓UNC
50	2"	150	165	127	92	8-ϕ19	32.5	7	8-5/8"-11	150	215	165.1	92	8-ϕ26	45.1	7	8-7/8"-9
65	2 1/2"	170	190	149.4	105	8-ϕ22	36	7	8-3/4"-10	170	245	190.5	105	8-ϕ30	48.3	7	8-1"-8
80	3"	180	210	168.5	127	8-ϕ22	39	7	8-3/4"-10	180	240	190.5	127	8-ϕ26	45.1	7	8-7/8"-8
100	4"	1490	273	216	157	8-ϕ26	45.5	7	8-7/8"-9	190	290	235	157	8-ϕ33	51.5	7	8-1 1/8"-8
125	5"	200	330	266.7	186	8-ϕ29	51.5	7	8-1"-8	200	350	279.4	186	8-ϕ36	57.8	7	8-1 1/4"-8
150	6"	210	356	292.1	216	12-ϕ29	55	7	12-1"-8	210	380	317.5	216	12-ϕ33	62.6	7	12-1 1/8"-8
200	8"	230	419	349.3	270	12-ϕ32	62.5	7	12-1 1/8"-8	230	470	393.7	270	12-ϕ39	70.5	7	12-1 3/8"-8
250	10"	250	508	431.8	324	16-ϕ36	70.5	7	16-1 1/4"-8	250	545	469.9	324	16-ϕ39	76.9	7	16-1 3/8"-8
300	12"	270	559	489	381	20-ϕ36	74	7	20-1 1/4"-8	270	610	533.4	381	20-ϕ39	86.4	7	20-1 3/8"-8
350	14"	290	604	527	413	20-ϕ39	77	7	20-1 3/8"-8	290	640	558.8	413	20-ϕ42	92.8	7	20-1 1/2"-8
400	16"	310	686	603.3	470	20-ϕ42	83.5	7	20-1 1/2"-8	310	705	616	470	20-ϕ45	95.9	7	20-1 5/8"-8
450	18"	330	743	654.1	533	20-ϕ45	90	7	20-1 5/8"-8	330	785	685.8	533	20-ϕ51	108.6	7	20-1 7/8"-8
500	20"	350	813	723.9	584	24-ϕ45	96	7	24-1 5/8"-8	350	855	749.3	584	20-ϕ55	115	7	20-2"-8
600	24"	390	940	838.2	692	24-ϕ51	109	7	24-1 7/8"-8	390	1040	901.7	692	20-ϕ68	148.7	7	20-2 1/2"-8
650	26"		890	806.4	727	28-ϕ45	118.2	7	28-1 5/8"-8		1020	901.7	762	20-ϕ68	142	7	20-2 1/2"-8
700	28"		950	863.6	784	28-ϕ48	122.9	7	28-1 3/4"-8		1105	971.6	819	20-ϕ74	154.7	7	20-2 3/4"-8
750	30"		1020	927.1	841	28-ϕ51	132.5	7	28-1 7/8"-8		1180	1035	876	20-ϕ80	162.6	7	20-3"-8
800	32"		1085	984.2	895	28-ϕ55	137.2	7	28-2"-8		1240	1092.2	927	20-ϕ80	167.4	7	20-3"-8
900	36"		1215	1104.9	1010	28-ϕ60	153.1	7	28-2 1/4"-8		1345	1200.2	1029	24-ϕ83	180.1	7	24-3 1/4"-8

上表仅提供部分数据作参考，不代表我司生产范围。具体数据可在询价时索要小样图。
The above table only provides part of the data for reference and does not represent the scope of our company's production. Specific data can be asked for a small sample map when inquiring.

国标、美标对焊式蝶阀主要连接尺寸
GB, API Main connection dimensions of butt welding butterfly valve

表 Table 6

公称通径 Nominal diameter (DN)	L1	PN0.6(MPa)	PN1.0(MPa)	PN1.6(MPa)	PN2.5(MPa)	PN4.0(MPa)
		D	D	D	D	D
100	127	108	220	220	235	235
125	140	133	250	250	270	270
150	140	159	285	285	300	300
200	152	219	340	340	360	375
250	165	273	395	405	425	450
300	178	325	445	460	485	515
350	190	377	505	520	555	580
400	216	426	565	580	620	660
450	222	480	615	640	670	685
500	229	530	670	715	730	755
600	267	630	780	840	845	890
700	292	720	895	910	960	
800	318	820	1015	1025	1085	
900	330	920	1115	1125	1185	
1000	410	1020	1230	1255	1320	
1200	470	1220	1455	1485	1530	
1400	530	1420	1675	1685	1755	
1600	600	1620	1915	1930	1975	
1800	670	1820	2115	2130	2195	
2000	760	2020	2325	2345	2425	

表 Table 7

NPS	L1	150Lb	300Lb
		D	D
3"	114	91	200
4"	127	117	200
6"	140	172	250
8"	152	223	250
10"	165	278	315
12"	178	329	315
14"	190	362	315
16"	216	412	315
18"	222	462	315
20"	229	516	400
22"	267	567	400
24"	267	619	400
26"	292	670	400
28"	292	721	400
30"	308	772	400
32"	318	825	400
36"	330	927	400

上表仅提供部分数据作参考，不代表我司生产范围。具体数据可在询价时索要小样图。
The above table only provides part of the data for reference and does not represent the scope of our company's production. Specific data can be asked for a small sample map when inquiring.

附录一：主要连接尺寸
Appendix 1: Main connection dimensions

美标凸耳式蝶阀主要连接尺寸
API Main connection dimensions of lug butterfly valve

表 Table 8

公称通径 Nominal diameter (DN)	NPS	150Lb								300Lb							
		L	D	D1	D2	n-d	C	f	螺栓UNC	L	D	D1	D2	n-d	C	f	螺栓UNC
50	2"	43	150	120.5	92	4-ϕ19	16	2	4-5/8"-11	43	165	127	92	8-ϕ18	22.5	2	8-5/8"-11
65	2 1/2"	46	180	139.5	105	4-ϕ19	18	2	4-5/8"-11	46	190	149	105	8-ϕ22	25.5	2	8-3/4"-10
80	3"	48	190	152.5	127	4-ϕ19	19	2	4-5/8"-11	48	210	168.1	127	8-ϕ22	29	2	8-3/4"-10
100	4"	54	230	190.5	157	8-ϕ19	24	2	8-5/8"-11	54	254	200.1	157	8-ϕ22	32	2	8-3/4"-10
125	5"	56	255	216	186	8-ϕ22	24	2	8-3/4"-10	59	280	234.9	186	8-ϕ22	35	2	8-3/4"-10
150	6"	57	280	241.5	216	8-ϕ22	26	2	8-3/4"-10	59	318	269.3	216	12-ϕ22	37	2	12-3/4"-10
200	8"	64	345	298.5	270	8-ϕ22	29	2	8-3/4"-10	73	381	330.2	270	12-ϕ26	41.5	2	12-7/8"-9
250	10"	71	405	362	324	12-ϕ26	31	2	12-7/8"-9	83	445	387.3	324	16-ϕ29	48	2	16-1"-8
300	12"	81	485	432	381	12-ϕ26	32	2	12-7/8"-9	92	521	450.8	381	16-ϕ32	51	2	16-1 1/8"-8
350	14"	92	535	476	413	12-ϕ29	35	2	12-1"-8	117	585	514.3	413	20-ϕ32	54	2	20-1 1/8"-8
400	16"	102	595	540	470	16-ϕ29	37	2	16-1"-8	133	650	571.5	470	20-ϕ35	57.5	2	20-1 1/4"-8
450	18"	114	635	578	533	16-ϕ32	40	2	16-1 1/8"-8	149	712	628.6	533	24-ϕ35	60.5	2	24-1 1/4"-8
500	20"	127	700	635	584	20-ϕ32	43	2	20-1 1/8"-8	159	775	685.8	584	24-ϕ35	63.5	2	24-1 1/4"-8
550	22"	154	815	749.5	692	20-ϕ35	48	2	20-1 1/4"-8	–	–	–	–	–	–	–	–
600	24"	154	749.3	692.15	641.35	20-ϕ35	46	2	20-1 1/4"-8	181	915	812.8	692	24-ϕ42	70	2	24-1 1/2"-8
650	26"	165	870	806.5	749	24-ϕ36	68.5	2	24-1 1/4"-8	229	970	876.3	749	28-ϕ45	79.8	2	28-1 5/8"-8
700	28"	165	927	863.6	800	28-ϕ36	71.5	2	28-1 1/4"-8	229	1035	939.8	800	28-ϕ45	86.2	2	28-1 5/8"-8
750	30"	165	984	914.4	857	28-ϕ36	75	2	28-1 1/4"-8	229	1090	997	857	28-ϕ48	92.5	2	28-1 3/4"-8
800	32"	190	1060.5	977.9	914	28-ϕ42	81	2	28-1 1/2"-8	241	1150	1054.1	914	28-ϕ51	98.9	2	28-1 7/8"-8
850	34"	203	1111	1028.7	965	32-ϕ42	83	2	32-1 1/2"-8	241	1205	1104.9	965	28-ϕ51	102.1	2	28-1 7/8"-8
900	36"	203	1168	1085.9	1022	32-ϕ42	90.5	2	32-1 1/2"-8	241	170	1168.4	1022	32-ϕ55	105.2	2	32-2"-8
950	38"	216	1238	1149.4	1073	32-ϕ42	87.5	2	32-1 1/2"-8	241	1170	1192.2	1029	32-ϕ42	108.4	2	32-1 1/2"-8
1000	40"	216	1289	1200.2	1124	36-ϕ42	90.5	2	36-1 1/2"-8	300	1240	1155.7	1086	32-ϕ45	114.8	2	32-1 5/8"-8
1050	42"	216	1346	1257.3	1194	36-ϕ42	97	2	36-1 1/2"-8	300	1290	1206.5	1137	32-ϕ45	119.5	2	32-1 5/8"-8
1100	44"	254	1403	1314.5	1245	40-ϕ42	102	2	40-1 1/2"-8	360	1355	1263.6	1194	32-ϕ48	124.3	2	32-1 3/4"-8
1150	46"	254	1454	1365.3	1295	40-ϕ42	103.5	2	40-1 1/2"-8	360	1415	1320.8	1245	28-ϕ51	129	2	28-1 7/8"-8
1200	48"	254	1511	1422.4	1359	44-ϕ42	108	2	44-1 1/2"-8	360	1465	1371.6	1302	32-ϕ51	133.8	2	32-1 7/8"-8
1250	50"	279	1568.5	1479.6	1410	44-ϕ48	111.5	2	44-1 3/4"-8	360	1530	1428.8	1359	32-ϕ55	140.2	2	32-2"-8
1300	52"	279	1625.5	1536.7	1461	44-ϕ48	116	2	44-1 3/4"-8	390	1580	1479.6	1410	32-ϕ55	144.9	2	32-2"-8
1350	54"	279	1683	1593.9	1511	44-ϕ48	121	2	44-1 3/4"-8	390	1660	1549.4	1467	28-ϕ60	152.9	2	28-2 1/4"-8
1400	56"	279	1746	1651	1575	48-ϕ48	124	2	48-1 3/4"-8	390	1710	1600.2	1518	28-ϕ60	154.4	2	28-2 1/4"-8
1450	58"	318	1803	1708.2	1626	48-ϕ48	129	2	48-1 3/4"-8	440	1760	1651	1575	32-ϕ60	159.2	2	32-2 1/4"-8
1500	60"	318	1854	1759	1676	52-ϕ48	132	2	52-1 3/4"-8	440	1810	1701.8	1626	32-ϕ60	164	2	32-2 1/4"-8

公称通径 Nominal diameter (DN)	NPS	600Lb								900Lb							
		L	D	D1	D2	n-d	C	f	螺栓UNC	L	D	D1	D2	n-d	C	f	螺栓UNC
100	4"	64	273	216	157	8-ϕ26	45.5	7	8-7/8"-9	190	290	235	157	8-ϕ33	51.5	7	8-1 1/8"-8
125	5"	78	330	266.7	186	8-ϕ29	51.5	7	8-1"-8	200	350	279.4	186	8-ϕ36	57.8	7	8-1 1/4"-8
150	6"	78	356	292.1	216	12-ϕ29	55	7	12-1"-8	210	380	317.5	216	12-ϕ33	62.6	7	12-1 1/8"-8
200	8"	102	419	349.3	270	12-ϕ32	62.5	7	12-1 1/8"-8	230	470	393.7	270	12-ϕ39	70.5	7	12-1 3/8"-8
250	10"	117	508	431.8	324	16-ϕ36	70.5	7	16-1 1/4"-8	250	545	469.9	324	16-ϕ39	76.9	7	16-1 3/8"-8
300	12"	140	559	489	381	20-ϕ36	74	7	20-1 1/4"-8	270	610	533.4	381	20-ϕ39	86.4	7	20-1 3/8"-8
350	14"	155	604	527	413	20-ϕ39	77	7	20-1 3/8"-8	290	640	558.8	413	20-ϕ42	92.8	7	20-1 1/2"-8
400	16"	178	686	603.3	470	20-ϕ42	83.5	7	20-1 1/2"-8	310	705	616	470	20-ϕ45	95.9	7	20-1 5/8"-8
450	18"	200	743	654.1	533	20-ϕ45	90	7	20-1 5/8"-8	330	785	685.8	533	20-ϕ51	108.6	7	20-1 7/8"-8
500	20"	216	813	723.9	584	24-ϕ45	96	7	24-1 5/8"-8	350	855	749.3	584	20-ϕ55	115	7	20-2"-8
600	24"	232	940	838.2	692	24-ϕ51	109	7	24-1 7/8"-8	390	1040	901.7	692	20-ϕ68	146.7	7	20-2 1/2"-8

上表仅提供部分数据作参考，不代表我司生产范围。具体数据可在询价时索要小样图。
The above table only provides part of the data for reference and does not represent the scope of our company's production. Specific data can be asked for a small sample map when inquiring.

国标三偏心蝶阀
GB Triple eccentric butterfly valve

表 Table 9

公称通径 DN/mm, NPS/in	公称压力PN/MPa Nominal pressure													
	PN6	ISO 5211	PN10	ISO 5211	PN16	ISO 5211	PN25	ISO 5211	PN40	ISO 5211	PN63	ISO 5211	PN100	ISO 5211
50	23	F07	30	F07	37	F07	43	F07	62	F07	103	F07	149	F07
65	36	F07	47	F07	57	F07	72	F07	100	F07	150	F07	232	F07
80	54	F07	70	F07	86	F07	108	F07	150	F07	221	F07	358	F10
100	83	F07	109	F07	130	F07	200	F07	266	F07	402	F10	630	F12
125	133	F07	204	F07	246	F07	311	F10	432	F10	637	F12	1003	F12
150	192	F07	300	F10	362	F10	455	F10	629	F12	938	F12	1488	F14
200	466	F10	543	F12	650	F12	827	F12	1156	F14	1760	F14	2755	F16
250	737	F12	860	F12	1040	F12	1340	F14	2104	F14	2878	F16	4969	F25
300	1068	F12	1248	F14	1535	F14	1970	F14	3136	F16	4346	F25	7434	F25
350	1469	F14	1732	F14	2129	F14	2783	F16	4420	F25	6144	F25	10702	F30
400	1940	F14	2284	F16	2833	F16	4152	F16	5987	F25	8340	F25	14646	F30
450	2474	F16	2922	F16	4110	F16	5424	F25	7722	F25	11050	F30	19400	F35
500	3087	F16	4145	F16	5160	F25	6825	F25	9862	F30	16338	F30	24860	F35
600	5106	F25	6126	F25	7680	F25	10211	F25	15930	F30	25156	F35	34333	
700	7081	F25	8497	F25	10800	F30	14580	F30	23118	F35				
800	9375	F30	11383	F30	15835	F30	21296	F35	31758	F35				
900	12027	F30	14673	F30	20540	F35	27966	F35	41788	F40				
1000	15048	F30	18447	F35	25976	F35	35781	F35	53815	F40				
1200	22248	F35	27524	F35	38930	F40	54729	F40	88062	F48				
1400	30940	F35	38778	F40	55995	F40								
1600	41266	F40	52372	F40	76115	F48								
1800	58013	F40	73435	F48	100413	F48								
2000	73798	F48	93592	F48	128271	F48								
2200	91260	F48	117075	F48	160872	F60								
2400	110550	F48	147540	F60	208644	F60								

以上扭矩值为光杆(无头)扭矩，含15%安全系数。仅供参考，具体扭矩以实际报价为准
The above torque values are polished rod (headless) torque, with a safety factor of 15%. For reference only, the specific torque is subject to the actual quote

附录二：扭矩与ISO5211连接盘参考值
Appendix 2: Torque and reference values of ISO5211 connecting plate

美标三偏心蝶阀
API Triple eccentric butterfly valve

表 Table 10

公称通径 DN/mm, NPS/in	LC					
	150Lb	ISO 5211	300Lb	ISO 5211	600Lb	ISO 5211
2"	39	F07	78	F07	162	F07
2 1/2"	64	F07	117	F07	252	F07
3"	96	F07	174	F07	389	F10
4"	177	F07	321	F10	697	F12
5"	278	F07	512	F10	1110	F14
6"	401	F10	756	F12	1615	F14
8"	735	F12	1420	F14	3034	F16
10"	1168	F14	2300	F16	5515	F25
12"	1740	F14	3442	F16	8308	F30
14"	2416	F16	5247	F25	11843	F30
16"	3615	F16	7270	F25	16446	F35
18"	4659	F25	9523	F30	21434	F35
20"	5858	F25	12078	F30	27829	F35
22"	7294	F25	15207	F30	35110	F40
24"	8835	F25	18460	F35	43510	F40
26"	10552	F30	22365	F35	55570	F40
28"	12452	F30	26752	F35	66820	F48
30"	14542	F30	31649	F35	79440	F48
32"	16827	F35	36686	F40	93506	F48
34"	20896	F35	45240	F40	108590	F48
36"	23785	F35	52078	F40	126269	F48
38"	26902	F35	59540	F40	145117	F60
40"	30254	F35	67050	F48	164349	F60
42"	33846	F40	75780	F48	176026	F60
44"	37545	F40	85210	F48	202422	F60
46"	41782	F40	94572	F48	225103	F60
48"	45799	F40	105406	F48		
50"	50396	F40				
52"	55465	F40				
54"	60418	F40				
56"	65857	F48				
58"	71590	F48				
60"	77625	F48				
64"	96968	F48				
72"	119782	F48				
80"	144841	F60				
84"	182211	F60				
88"	214860	F60				

以上扭矩值为光杆(无头)扭矩，含15%安全系数。仅供参考，具体扭矩以实际报价为准
The above torque values are polished rod (headless) torque, with a safety factor of 15%. For reference only, the specific torque is subject to the actual quote

国标高性能蝶阀
GB high performance butterfly valve

表 Table 11

公称通径 DN/mm, NPS/in	公称压力PN/MPa Nominal pressure													
	PN6	ISO 5211	PN10	ISO 5211	PN16	ISO 5211	PN25	ISO 5211	PN40	ISO 5211	PN63	ISO 5211	PN100	ISO 5211
50	20	F07	26	F07	31	F07	37	F07	53	F07	88	F07	127	F07
65	31	F07	40	F07	48	F07	61	F07	85	F07	128	F07	197	F07
80	46	F07	60	F07	73	F07	92	F07	128	F07	188	F07	304	F10
100	83	F07	93	F07	111	F07	170	F07	226	F07	342	F10	536	F12
125	113	F07	173	F07	209	F07	264	F10	367	F10	541	F12	853	F12
150	163	F07	255	F10	308	F10	387	F10	535	F12	797	F12	1265	F14
200	396	F10	462	F12	553	F12	703	F12	983	F14	1496	F14	2342	F16
250	626	F12	731	F12	884	F12	1139	F14	1788	F14	2446	F16	4224	F25
300	908	F12	1214	F14	1305	F14	1675	F14	2666	F16	3694	F25	6319	F25
350	1249	F14	1472	F14	1810	F14	2366	F16	3757	F25	5222	F25	9097	F30
400	1649	F14	1941	F16	2408	F16	3529	F16	5089	F25	7089	F25	12449	F30
450	2103	F16	2484	F16	3494	F16	4610	F25	6564	F25	9393	F30	16490	F35
500	2624	F16	3523	F16	4386	F25	5801	F25	8383	F30	13887	F30	21131	F35
600	4340	F25	5207	F25	6528	F25	8679	F25	13541	F30	21383	F35	29183	
700	6019	F25	7222	F25	9180	F30	12393	F30	19650	F35				
800	7969	F30	9676	F30	13460	F30	18102	F35	26994	F35				
900	10223	F30	12472	F30	17459	F35	23771	F35	35520	F40				
1000	12791	F30	15705	F35	22080	F35	30414	F35	45743	F40				
1200	18911	F35	23395	F35	33091	F40	46520	F40	74853	F48				
1400	26299	F35	32961	F40	47596	F40								
1600	35076	F40	44516	F40	64698	F48								
1800	49311	F40	62420	F48	85351	F48								
2000	62728	F48	79553	F48	109030	F48								
2200	77571	F48	99514	F48	136741	F60								
2400	93968	F48	125409	F60	177347	F60								

以上扭矩值为光杆(无头)扭矩，含15%安全系数。仅供参考，具体扭矩以实际报价为准
The above torque values are polished rod (headless) torque, with a safety factor of 15%. For reference only, the specific torque is subject to the actual quote

附录二：扭矩与ISO5211连接盘参考值
Appendix 2: Torque and reference values of ISO5211 connecting plate

美标高性能蝶阀
API high performance butterfly valve

表 Table 12
对夹、凸耳式
Wafer, lug type

公称通径 DN/mm, NPS/in	LC					
	150Lb	ISO 5211	300Lb	ISO 5211	600Lb	ISO 5211
2"	33	F07	66	F07	138	F07
2 1/2"	54	F07	99	F07	214	F07
3"	82	F07	148	F07	331	F10
4"	150	F07	273	F10	592	F12
5"	236	F07	435	F10	944	F14
6"	343	F10	643	F12	1373	F14
8"	625	F12	1207	F14	2579	F16
10"	993	F14	1955	F16	4688	F25
12"	1479	F14	2926	F16	7062	F30
14"	2054	F16	4460	F25	110067	F30
16"	3073	F16	6180	F25	13979	F35
18"	3960	F25	8095	F30	18219	F35
20"	4979	F25	10266	F30	23655	F35
22"	6200	F25	12956	F30	29844	F40
24"	7510	F25	15691	F35	36984	F40
26"	8969	F30	19010	F35	47235	F40
28"	10584	F30	22739	F35	56797	F48
30"	12361	F30	26902	F35	67524	F48
32"	14303	F35	31183	F40	79480	F48
34"	17762	F35	38454	F40	92302	F48
36"	20217	F35	44266	F40	107329	F48
38"	22867	F35	50609	F40	123349	F60
40"	25716	F35	56993	F48	139697	F60
42"	28769	F40	64413	F48	149622	F60
44"	31913	F40	72429	F48	172059	F60
46"	35515	F40	80386	F48	191338	F60
48"	38929	F40	89595	F48		
50"	42837	F40				
52"	47145	F40				
54"	51355	F40				
56"	55978	F48				
58"	60852	F48				
60"	65981	F48				
64"	82423	F48				
72"	101815	F48				
80"	123115	F60				
84"	154879	F60				
88"	182631	F60				

以上扭矩值为光杆(无头)扭矩，含15%安全系数。仅供参考，具体扭矩以实际报价为准
The above torque values are polished rod (headless) torque, with a safety factor of 15%. For reference only, the specific torque is subject to the actual quote

国标、美标双偏心软密封蝶阀
GB, API Double eccentric soft sealing butterfly valve

表 Table 13

公称尺寸 Nominal Size	NPS	公称压力PN/MPa Nominal pressure						LC	
		1.0		1.6		2.5		150LB	
DN/mm	in	力矩/N.m Torque/N.m	ISO 5211	力矩/N.m Torque/N.m	ISO 5211	力矩/N.m Torque/N.m	ISO 5211	力矩/N.m Torque/N.m	ISO 5211
50	2"	16	F07	21	F07	30	F07	39	F07
65	2 1/2"	26	F07	34	F07	49	F07	65	F07
80	3"	38	F07	52	F07	74	F07	99	F07
100	4"	58	F07	80	F07	118	F07	155	F07
125	5"	91	F07	129	F07	186	F07	244	F07
150	6"	138	F07	188	F07	278	F10	365	F10
200	8"	246	F07	344	F10	510	F10	666	F12
250	10"	396	F10	567	F12	840	F12	1095	F12
300	12"	717	F12	1020	F12	1495	F14	1625	F14
350	14"	998	F12	1423	F14	1898	F14	2322	F16
400	16"	1316	F14	1878	F14	2510	F16	3123	F16
450	18"	1702	F14	2437	F16	3270	F16	4070	F16
500	20"	2122	F14	3082	F16	4220	F16	5170	F25
600	24"	3150	F16	4597	F25	6324	F25	7924	F25
700	28"	4420	F25	6474	F25	9074	F30	11366	F30
800	32"	5885	F25	8840	F25	12464	F30	15707	F30
900	36"	7666	F25	11549	F30	16450	F30	20846	F35
1000	40"	9734	F30	14706	F30	21143	F35	26930	F40
1200	48"	14663	F30	22469	F35	33217	F35	42232	F40
1400	56"	20839	F35	32346	F35	48020	F40	61888	F40
1600	64"	28372	F35	44359	F40	67340	F40	73750	F48
1800	72"	37073	F40	59065	F40	90287	F48	117400	F48
2000	80"	47575	F40	76225	F48	118205	F48	143485	F60
2200	88"	59530	F40	96604	F48	151778	F60	174377	F60
2400	90"	73184	F48	119295	F48	188233	F60		

以上扭矩值为光杆(无头)扭矩，含15%安全系数。仅供参考，具体扭矩以实际报价为准
The above torque values are polished rod (headless) torque, with a safety factor of 15%. For reference only, the specific torque is subject to the actual quote

附录二：扭矩与ISO5211连接盘参考值
Appendix 2: Torque and reference values of ISO5211 connecting plate

国标、美标中线蝶阀
GB, API Centerline butterfly valve

表 Table 14

公称尺寸 Nominal Size	NPS	公称压力PN/MPa Nominal pressure				LC	
		1.0		1.6		150	
DN/mm	in	力矩/N.m Torque/N.m	ISO 5211	力矩/N.m Torque/N.m	ISO 5211	力矩/N.m Torque/N.m	ISO 5211
50	2"	23	F07	23	F07	29	F07
65	2 1/2"	36	F07	36	F07	46	F07
80	3"	53	F07	53	F07	71	F07
100	4"	86	F07	86	F07	112	F07
125	5"	135	F07	135	F07	182	F07
150	6"	231	F07	231	F07	283	F10
200	8"	422	F10	422	F10	516	F10
250	10"	580	F12	680	F12	830	F12
300	12"	688	F12	1142	F12	1245	F12
350	14"	964	F12	1596	F14	1762	F14
400	16"	1295	F14	2140	F14	2350	F16
450	18"	1685	F14	2820	F16	3088	F16
500	20"	2104	F14	3520	F16	4351	F25
600	24"	3150	F16	5324	F25	7050	F25
700	28"	4450	F25	7550	F25	10030	F30
800	32"	6027	F25	10136	F30	13671	F30
900	36"	7853	F25	13413	F30	18028	F35
1000	40"	9974	F30	18384	F35	23035	F35
1200	48"	15168	F30	28284	F35	35593	F40
1400	56"	24116	F35	40602	F40	54280	F40
1600	64"	32936	F35	56027	F40	63818	F40
1800	72"	46320	F40	74405	F48	99179	F48
2000	80"	63290	F40	96550	F48	120676	F48

以上扭矩值为光杆(无头)扭矩，含15%安全系数。仅供参考，具体扭矩以实际报价为准
The above torque values are polished rod (headless) torque, with a safety factor of 15%. For reference only, the specific torque is subject to the actual quote

材料特性 Materials characteristic

表 Table 15

尺寸/规格 ASTM Specification		化学要求 Chemical Requirements										抗拉要求Tensile Requirements				
		C	Mn	Si	P	S	Cr	Ni	Mo	Cu	V	Rm	Rel	A	Z	HB
		碳	锰	硅	磷	硫	铬	镍	钼	铜	钒	抗拉	屈服	延伸	收缩	硬度
		%										Mpa	Mpa	%	%	
														碳钢 Cast Steel		
碳钢 carbon steel	A216-WCA	0.25	0.70	0.60	0.040	0.045	0.50	0.50	0.20	0.30	0.03	415-585	205	24	35	
	A216-WCB	0.30	1.00	0.60	0.040	0.045	0.50	0.50	0.20	0.30	0.03	485-655	250	22	35	
	A216-WCC	0.25	1.20	0.60	0.040	0.045	0.50	0.50	0.20	0.30	0.03	485-655	275	22	35	
														碳钢 Cast Steel		
铬钼钢 Cr Mo steel	A217-WC1	0.25	0.50-0.80	0.60	0.040	0.045	0.35	0.45-0.65	0.45-0.65	0.50	-	450-620	240	24	35	
	A217-WC6	0.05-0.20	0.50-0.80	0.60	0.040	0.045	1.00-1.50	0.50	0.45-0.65	0.50	-	485-655	275	20	35	
	A217-WC9	0.05-0.18	0.40-0.70	0.60	0.040	0.045	2.00-2.75	0.50	0.90-1.20	0.50	-	485-655	275	20	35	
	A217-C5	0.20	0.40-0.70	0.75	0.040	0.045	4.00-6.50	0.50	0.45-0.65	0.50	-	620-795	415	18	35	
	A217-C12	0.20	0.35-0.65	1.00	0.040	0.045	8.00-10.0	0.50	0.90-1.20	0.50	-	620-795	415	18	35	
														碳钢 Cast Steel		
镍合金钢 Nickel alloy steel	A494 M-35-1	0.35	1.50	1.25	0.030	0.030	-	Allowance	-	26.0-33.0	Fe≤3.50	450	170	25	-	
	A494 CW-6M	0.07	1.00	1.00	0.040	0.030	17.0-20.0	Allowance	17.0-20.0	-	Fe≤3.00	495	275	25	-	
	A494 CY-40	0.40	1.50	3.00	0.030	0.030	14.0-17.0	Allowance		-	Fe≤11.0	185	195	30	-	
								-								
														碳钢 Cast Steel		
不锈钢 Stainless steel	A351-CF8	0.08	1.50	2.00	0.040	0.040	18.0-21.0	8.0-11.0	0.50	-	-	485	205	35	35	
	A351-CF8M	0.08	1.50	1.50	0.040	0.040	18.0-21.0	9.0-12.0	2.0-3.0	-	-	485	205	30	30	
	A351-CF3	0.03	1.50	2.00	0.040	0.040	17.0-21.0	8.0-12.0	0.50	-	-	485	205	35	35	
	A351-CF3M	0.03	1.50	1.50	0.040	0.040	17.0-21.0	9.0-13.0	2.0-3.0	-	-	485	205	30	30	
	A351-CN7M	0.07	1.50	1.50	0.040	0.040	19.0-22.0	27.5-30.5	2.0-3.0	3.0-4.0	-	450	170	35	35	
														碳钢 Cast Steel		
碳钢 carbon steel	A352-LCB	0.30	1.00	0.60	0.040	0.045	0.50	0.50	0.20	0.30	0.03	450-650	240	24	35	
	A352-LCC	0.25	1.20	0.60	0.040	0.045	0.50	0.50	0.20	0.30	0.03	485-655	275	22	35	
	A352-LC1	0.25	0.50-0.80	0 60	0.040	0.045	-	-	0.45-0.65	-	-	450-620	240	24	35	
	A352-LC2	0.25	0.50-0.80	0 60	0.040	0.045	-	2.00-3.00	-	-	-	485 655	275	24	35	
	A352-LC3	0.15	0.50-0.80	0 60	0.040	0.045	-	3.00-4.00	-	-	-	485 655	275	24	35	
														锻钢Forged Steel		
碳钢 carbon steel	A105(N)	0.35	0.60-1.05	0.35	0.040	0.050	0.30	0.40	0.12	0.40	0.03	485	250	30	30	187
	A350-LF1	0.30	1.35	0.15-0.3	0.035	0.040	0.30	0.40	0.12	0.40	0.03	415-585	205	25	38	
	A350-LF2	0.30	1.35	0.15-0.30	0.035	0.040	0.30	0.40	0.12	0.40	0.03	485-655	250	22	30	
	A350-LF3	0 20	0.90	0.20-0.35	0.035	0.040	0.30	3.25-3.7	0.12	0.40	0.03	485-655	260	22	35	
	A350-LF9	0.20	0.40-1.06	-	0.035	0.040	0.30	1.60-2.24	0.12	0.75-1.25	0.03	435-605	315	25	38	
														锻钢Forged Steel		
不锈钢 Stainless steel	A182-F304	0.08	2.00	1.00	0.040	0.030	18.0-20.0	8.0-11.0	-	-	-	515	205	30	50	
	A182-F316	0.08	2.00	1.00	0.040	0.030	16.0-18.0	10.0-14.0	2.0-3.0	-	-	515	205	30	50	
	A182-F304L	0.03	2.00	1.00	0.045	0.030	18.0-20.0	8.0-13.0	-	-	-	485	170	30	50	
	A182-F316L	0.03	2.00	1.00	0.045	0.030	16.0-18.0	10.0-15.0	2.0-3.0	-	-	485	170	30	50	
														紧固件 Fastening Piece		
螺栓 Stud	A193-B7	0.37-0.49	0.65-1.10	0.15-0.35	0.035	0.040	0.75-1.20	-	0.15-0.25	-	-	860	720	16	50	
	A193-B7M	0.37-0.49	0.65-1.10	0.15-0.35	0.035	0.040	0.75-1.20	-	0.15-0.25	-	-	690	550	18	50	235
	A193-B8	0.08	2.00	1.00	0.045	0.030	18.0-20.0	8.0-10.50	-	-	-	515	205	30	50	223
	A193-B8A	0.08	2.00	1.00	0.045	0.030	18.0-20.0	8.0-10.50	-	-	-	515	205	30	50	223
	A193-B8M	0.08	2.00	1.00	0.045	0.030	16.0-18.0	10.0-14.0	2.0-3.0	-	-	515	205	30	50	192
	A320-L7	0.38-0.48	0.75-1.00	0.15-0.35	0.035	0.040	0.80-1.10	-	0.15-0.25	-	-	860	725	16	50	
螺母 Nut	A194-2H	≥0.40	1.00	0.40	0.040	0.050	-	-	-	-	-	-	-	-	-	248-352
	A194-2HM	≥0.40	1.00	0.40	0.040	0.050	-	-	-	-	-	-	-	-	-	159-237
	A194-7	0.37-0.49	0.65-1.10	0.15-0.35	0.040	0.040	0.75-1.20	-	0.15-0.25	-	-	-	-	-	-	248-352
	A194-8	0.08	2.00	1.00	0.045	0.030	18.0-20.0	8.0-10.5	-	-	-	-	-	-	-	126-300
	A194-8M	0.08	2.00	1.00	0.045	0.030	16.0-18.0	10.0-14.0	2.0-3.0	-	-	-	-	-	-	126-300

数据来自网络，仅供参考
The data comes from the Internet, for reference only

附录三：材质参考
Appendix 3: Material Reference

国际材料标准 International Materialsstandards

表 Table 16

材料 Materials		美国 America	德国 Germany			中国 China
		ASTM/AISI/SAE/ASME	DIN No.	DIN TYPE	材料数目 MATERIALNUMBER	GB
						碳钢 Cast Steel
碳钢 carbon steel	A216-WCA	ASTM A216-WCA	1681	GS-38	1.042	WCA
	A216-WCB	ASTM 216-WCB	17245	GS-C25	1 0619	WCB
	A216-WCC					WCC
						碳钢 Cast Steel
铬钼钢 Cr Mo steel	A217-WC1	ASTM A217-WC1	17245	GS-22Mo4	1.5419	ZG20Mo
	A217-WC6	ASTM A217 WC6	17245	GS-17CrMo55	1.7357	15CrMo
	A217-WC9	ASTM A217 WC9	17245	GS-18CrMo810	1.7379	12Cr1MoIV
	A217-C5	ASTM A217 C5	VDEh SPW 595	GS-12CrMo195	17363	1Cr5Mo
	A217-C12	ASTM A217 C12	VDEh SPW 595	G-X12CrMo101	17389	9Cr1Mo
						碳钢 Cast Steel
镍合金钢 Nickel alloy steel	A494 M-35-1					
	A494 CW-6M					
	A494 CY-40					
						碳钢 Cast Steel
不锈钢 Stainless steel	A351-CF8	ASTM A351-CF8	17445	G-X6CrNi189	1.4308	0Cr18Ni9
	A351-CF8M	ASTMA351-CF8M	17445	G-X6CrNiMO1810	1.4408	1Cr18Ni12Mo2Ti
	A351-CF3	ASTM A351-CF3	17440	G-X2CrNi189	1.4306	00Cr18Ni10
	A351-CF3M	ASTM A351-CF3M	17440	G-X2CrNiMO1810	1.4404	00Cr17Ni14Mo2
	A351-CN7M	ASTMA351-CN7M				
						碳钢 Cast Steel
碳钢 carbon steel	A352-LCB	ASTM A352-LCB	SFW 685	GS-21Mo5	1.1138	LCB
	A352-LCC	ASTMA352-LCC	17173	GS-26CrMo4	1.7219	LCC
	A352-LC1	ASTM A352-LC1				
	A352-LC2	ASTMA352-LC2				ZG0CrMnVA1
	A352-LC3	ASTMA352-LC3	SEW 685	GS10Ni14	1.5638	
						锻钢Forged Steel
碳钢 carbon steel	A105(N)	ASTMA105	17100	St50-2	1.005	25
	A350-LF1	ASTMA350-LF1	SEW 680	TTSt41	1.0437	
	A350-LF2	ASTMA350-LF2	17155	19Mn5	1.0482	
	A350-LF3	ASTMA350-LF3	17173	10Ni14	1.5637	
	A350-LF9	ASTMA350-LF9				
						锻钢Forged Steel
不锈钢 Stainless steel	A182-F304	ASTM A182-F304	17440	X5CrNi189	1.4301	0Cr18Ni9
	A182-F316	ASTM A182-F316	17440	X5CrNiMo1810	1.4401	0Cr17Ni12Mo2
	A182-F304L	ASTM A182-F304L	17440	X2CrNi810	1.4311	00Cr18Ni10
	A182-F316L	ASTM A182-F316L	17440	X2CrNiMo1810	1.4404	00Cr17Ni14Mo2
						紧固件 Fastening Piece
螺栓 Stud	A193-B7	ASTMA193 GRAD B7	17240	40CrMoV47	1.7711	35CrMoa
	A193-B7M	ASTMA193 GRAD B7M				
	A193-B8	ASTMA193 GRAD B8	17440	X5CrNI189	1.4301	0Cr18Ni9
	A193-B8A					
	A193-B8M	ASTMA193 GRAD B8M	17245	X6CrNiMoTi17 122	1.4571	0Cr17Ni12Mo2
	A320-L7	ASTM A320 GR L7	17200	42CrMo4	1.7225	42CrMo
螺母 Nut	A194-2H	ASTMA194 GRAD 2H	17440	CK35	1.1181	45
	A194-2HM	ASTM A194 GRAD 2HM				
	A194-7	ASTMA194 GRAD 7	17200	24CrMo5	1.7258	20CrMo
	A194-8	ASTMA194 GRAD 8	17245	X6CrNiMo17 122	1.4571	0Cr18Ni9
	A194-8M	ASTMA194 GR8M	17440	X5CrNiMo 1810	1.4401	0Cr17Ni12Mo

数据来自网络，仅供参考
The data comes from the Internet, for reference only